ANGELS CAMP

STREET

IMPROVEMENT

STANDARDS

APPENDICES

City of Angels, Typical Street Sections . . . . . Detail ST-1
City of Angels, State Highway Typical Street Section-Pine Street North . . . Detail ST-2
City of Angels, Standard Temporary Cul-De-Sac . . . . . Detail ST-3
City of Angels, Standard Permanent Cul-De-Sac . . . . . Detail ST-4
City of Angels, Street Sign Standard . . . . . Detail ST-5
City of Angels, Standard Street and Stop Sign Post Details . . . . . Detail ST-6
City of Angels, Standard Street Sign Detail . . . . . Detail ST-7
City of Angels, Standard Driveway Approaches . . . . . Detail ST-8
City of Angels, Standard Driveways for Hillside Lots, New Subdivision . . . Detail ST-9
City of Angels, Standard Guard Panel . . . . . Detail ST-10
City of Angels, Light Standard . . . . . Detail ST-11
City of Angels, Standard Curb, Gutter and Sidewalk . . . . . Detail SW-1
City of Angels, Standard Driveway Approach Detail . . . . . Detail SW-2
City of Angels, Standard Vertical, Roll Curb and Gutter . . . . . Detail SW-3
City of Angels, Standard Cross Gutter and Intersection Plan . . . . . Detail SW-4
City of Angels, Standard Pedestrian (Wheel Chair) Ramp . . . . . Detail SW-5
City of Angels, Storm Drain Manhole . . . . . Detail SD-1
City of Angels, Storm Drain Junction Box . . . . . Detail SD-2
City of Angels, Standard Type II Drop Inlet . . . . . Detail SD-3
City of Angels, Standard Storm Drain Saddle Manhole . . . . . Detail SD-4
City of Angels, Rainfall Intensity Chart . . . . . Detail SD-5
City of Angels, Curb Inlet Frame and Grate with Hood . . . . . Detail SD-6
City of Angels, Sewer Service Laterals . . . . . Detail SS-1
City of Angels, Standard Type "A" Manhole . . . . . Detail SS-2
City of Angels, Standard Type "B" Manhole . . . . . Detail SS-3
City of Angels, Standard Force Main Details . . . . . Detail SS-4
City of Angels, Sewer Manhole Cover . . . . . Detail SS-5
City of Angels, Standard Bolt Down Manhole Cover . . . . . Detail SS-6
City of Angels, Standard Clean Out . . . . . Detail SS-7
City of Angels, Standard Flusher Branch and Cleanout Assembly . . . . . Detail SS-8
City of Angels, Standard Utility Crossing . . . . . Detail SS-9
City of Angels, Standard Pavement Replacement and Backfill Details . . . . Detail SS-10
City of Angels, Peak Flow Factors . . . . . Detail SS-11
City of Angels, Valve and Box Detail . . . . . Detail WS-1
City of Angels, Service Connection Detail . . . . . Detail WS-2
City of Angels, 2" Blow Off Valve . . . . . Detail WS-3
City of Angels, Fire Hydrant Assembly . . . . . Detail WS-4
City of Angels, Trench Details, Water and Sewer . . . . . Detail WS-5
City of Angels, Pressure Reducing Station . . . . . Detail WS-6
City of Angels, Air/Vac Valve . . . . . Detail WS-7
City of Angels, Locator Wire Splice Detail . . . . . Detail WS-8
City of Angels, Thrust Block Schedule . . . . . Detail WS-9
City of Angels, Anchor Block . . . . . Detail WS-10
City of Angels, Standard Monument . . . . . Detail MD-1

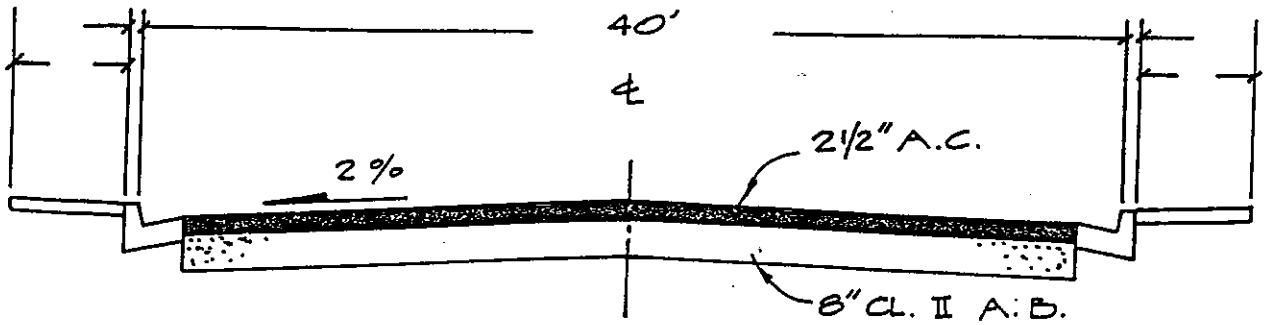

ARTERIAL URBAN
NO PARKING

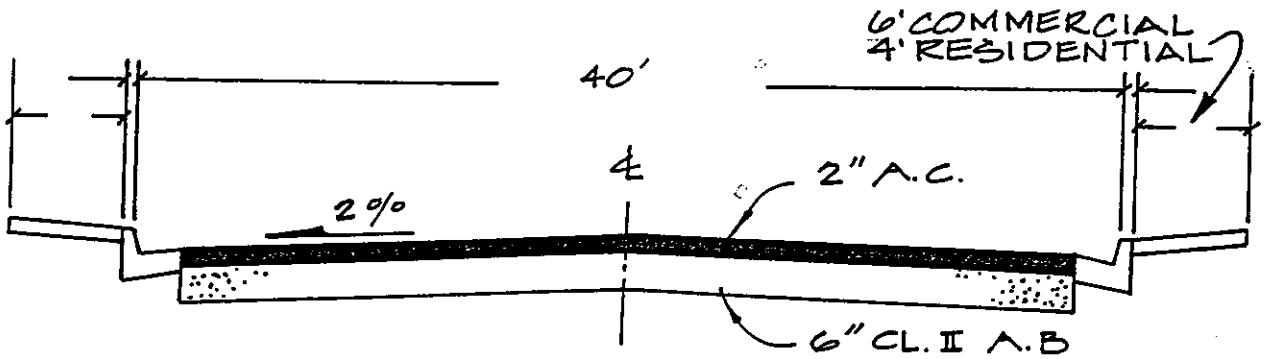

COLLECTOR

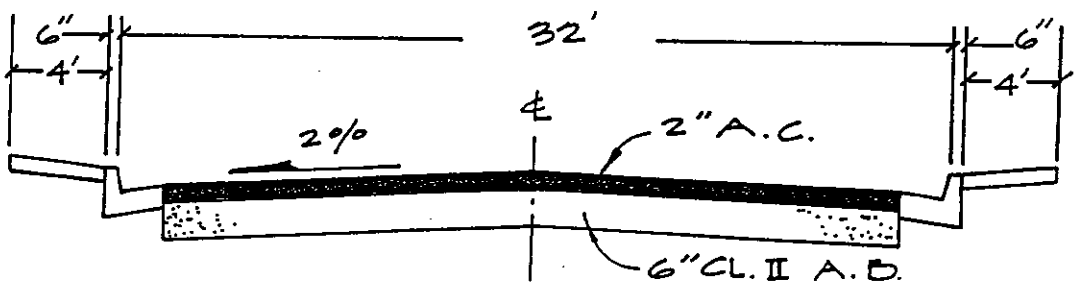

MINOR

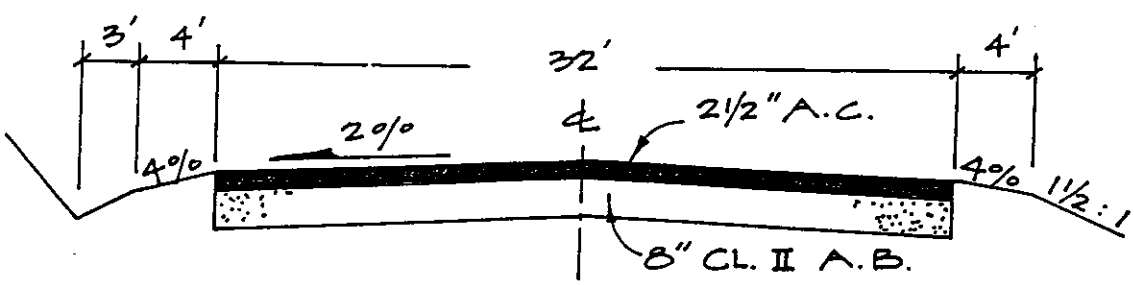

ARTERIAL RURAL

DEPARTMENT OF PUBLIC WORKS	CITY OF ANGELS TYPICAL STREET SECTIONS (N. T. S.)				ST-1
			2/24/81	R.T.W.	
		REV.	DATE	BY	

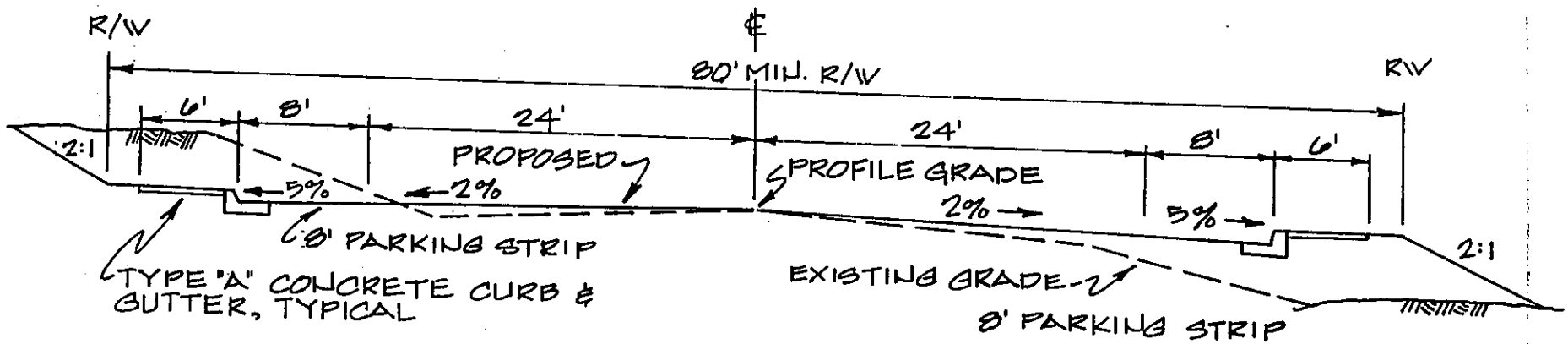

NOTE: SLOPE EASEMENT REQUIRED FOR CUT & FILL SECTIONS.

DEPARTMENT OF PUBLIC WORKS	CITY OF ANGELS STATE HIGHWAY TYPICAL SECTION PINE STREET - NORTH N.T.S.				ST-2
		REV	DATE	BY	

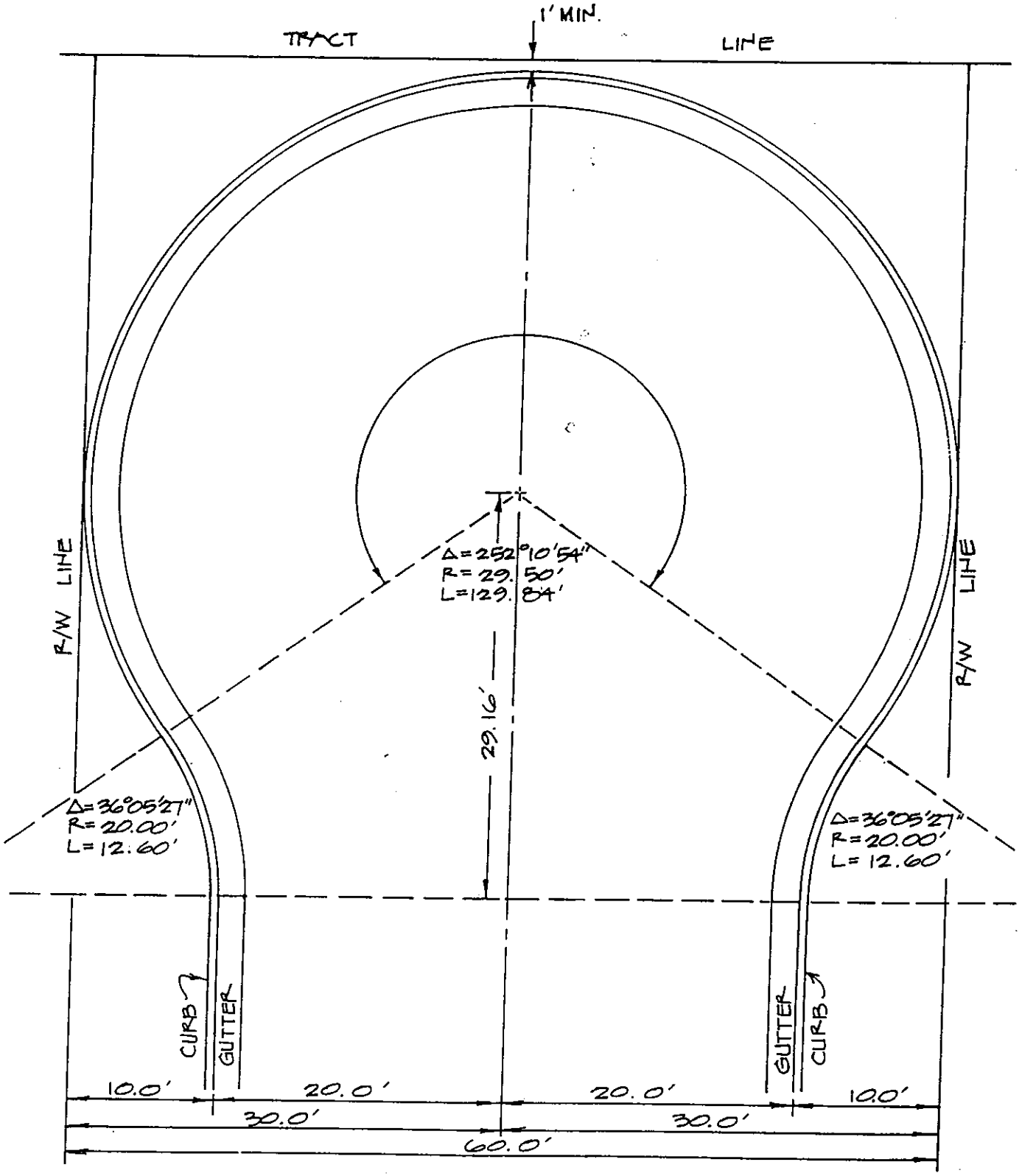

DEPARTMENT OF PUBLIC WORKS	CITY OF ANGELS STANDARD TEMPORARY CUL-DE-SAC SCALE: 1" = 10'	REV	DATE	BY	ST-3
			2/24/81	R.T.W.	

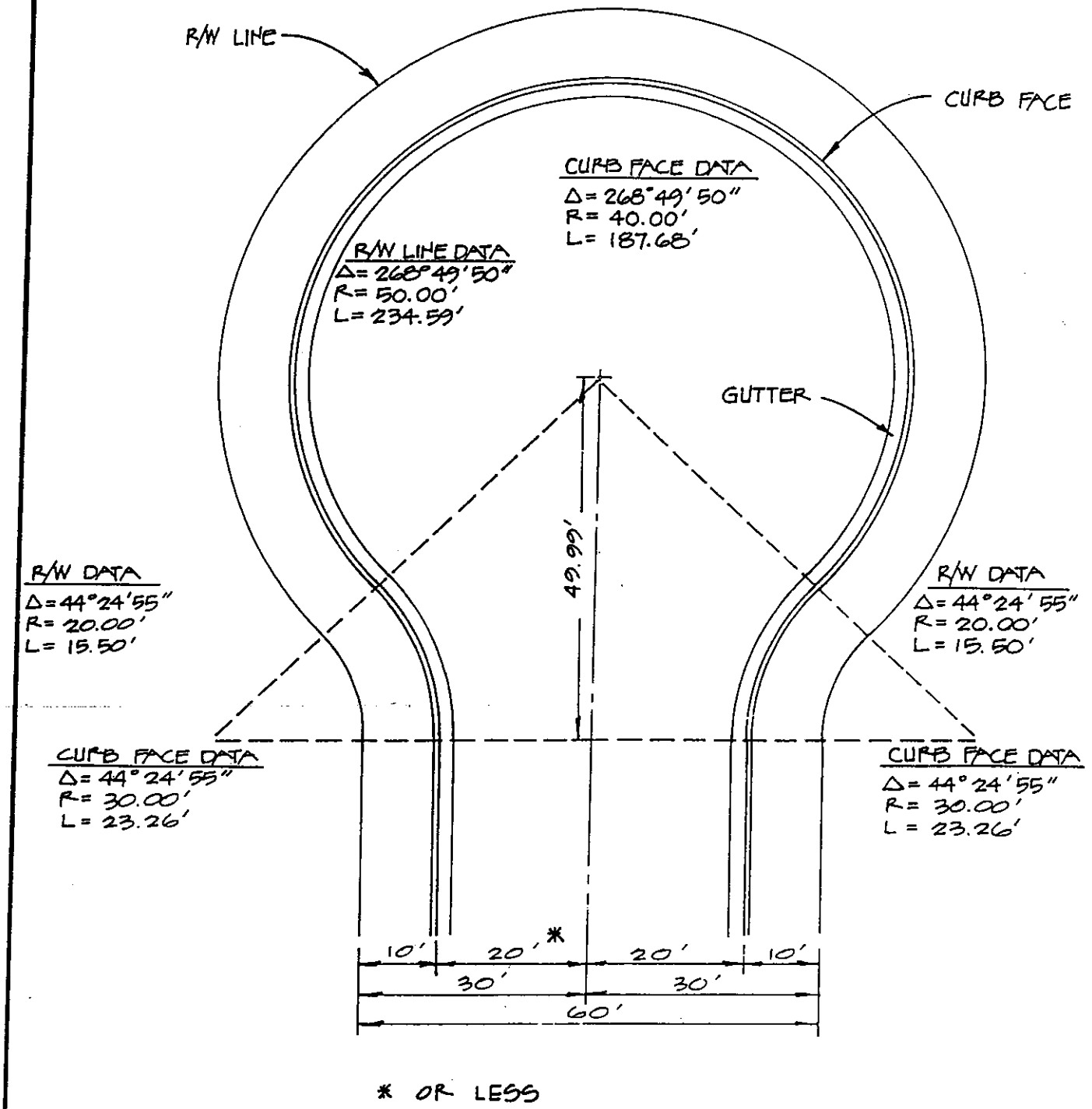

* OR LESS

DEPARTMENT OF PUBLIC WORKS	CITY OF ANGELS STANDARD PERMANENT CUL-DE-SAC SCALE: 1" = 20'				ST-4
			2/24/81	R.T.W.	
		REV.	DATE	BY	

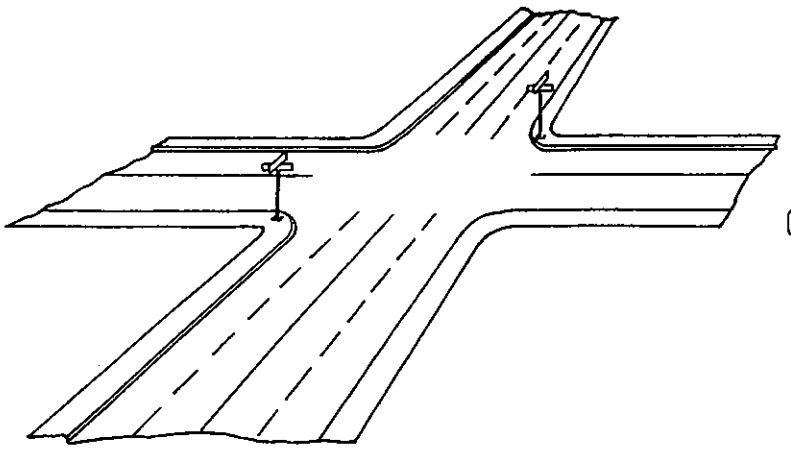

LOCATION AT INTERSECTION

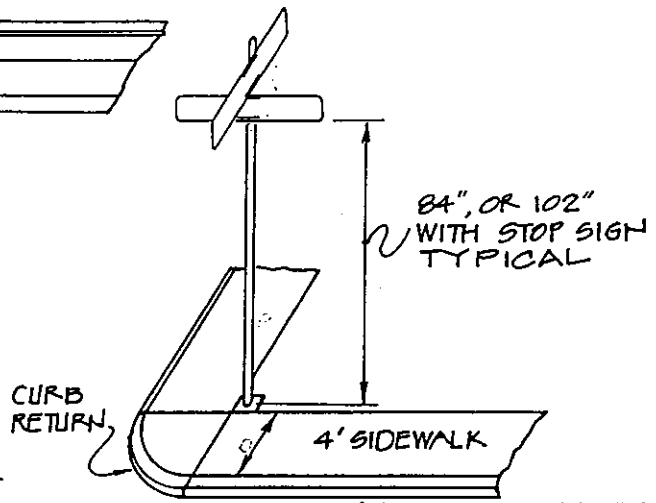

LOCATION IN 4 FT. MONOLITHIC SIDEWALK

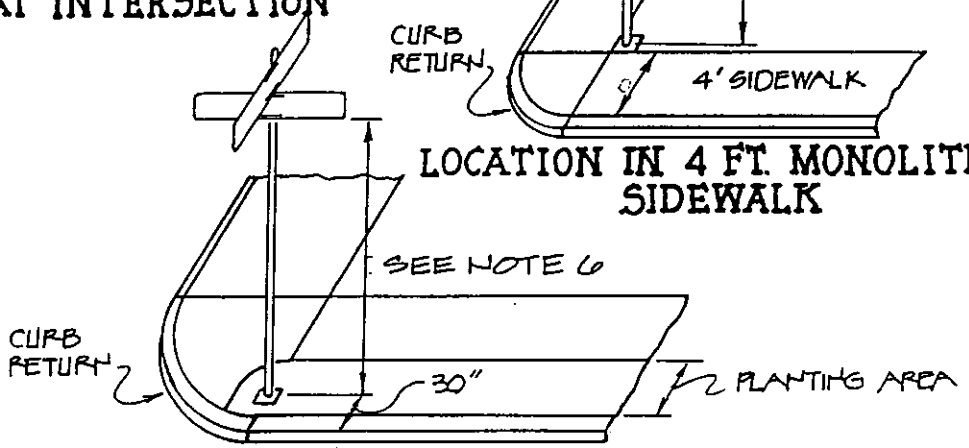

LOCATION IN PLANTING STRIP

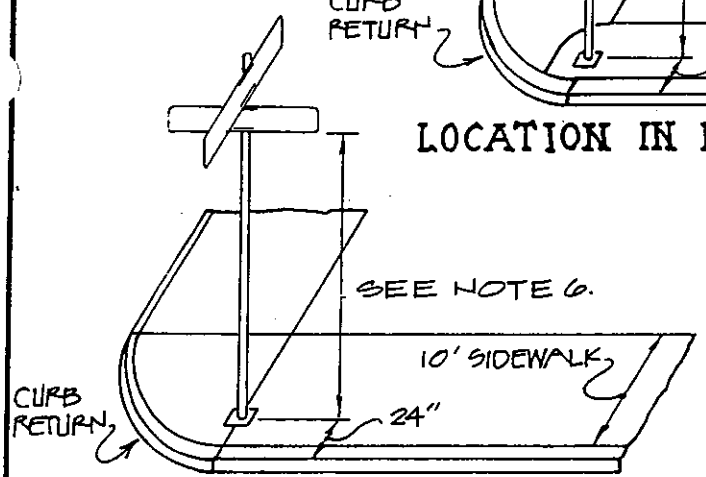

LOCATION IN 10 FT. MONOLITHIC SIDEWALK

NOTES

1. CORNER FOR INSTALLATION SHALL BE AS DESIGNATED BY THE ENGINEER.
2. SAWCUT REQUIRED IF SIGN INSTALLED AFTER SIDEWALK POURED.
3. WHEN POURED IN SIDEWALK, POLES WILL BE SET PRIOR TO SIDEWALK POUR.
4. UTILIZE SAME POST FOR STOP SIGN AND STREET NAME SIGN WHERE POSSIBLE.
5. RURAL INSTALLATION; SIGN SHALL BE LOCATED AS SHOWN, SETBACK AS REQUIRED.
6. 84" OR 102" WITH STOP SIGN.

DEPARTMENT OF PUBLIC WORKS	CITY OF ANGELS STREET SIGN STANDARD N. T. S.	REV.	DATE	BY	ST-5
			2/24/81	R.T.W.	

NOTES

1. WHERE STREET SIGNS & STOP SIGNS ARE TO BE USED IN THE SAME LOCATION, THEY MAY BE MOUNTED ON THE SAME POST.
2. POSTS SHALL BE SET MIN. 5', MAX. 30' OFF THE TRAVELED WAY, OR 5' FROM CURB OR DIKE FACE.
3. A) BASE OF STREET SIGN SHALL BE 7 FT. MINIMUM ABOVE THE PLANE LEVEL WITH THE EDGE OF TRAVELED WAY.
   B) BASE OF STOP SIGN SHALL BE 5 FT. TO 7 FT. ABOVE THE PLANE LEVEL WITH THE EDGE OF TRAVEL WAY.

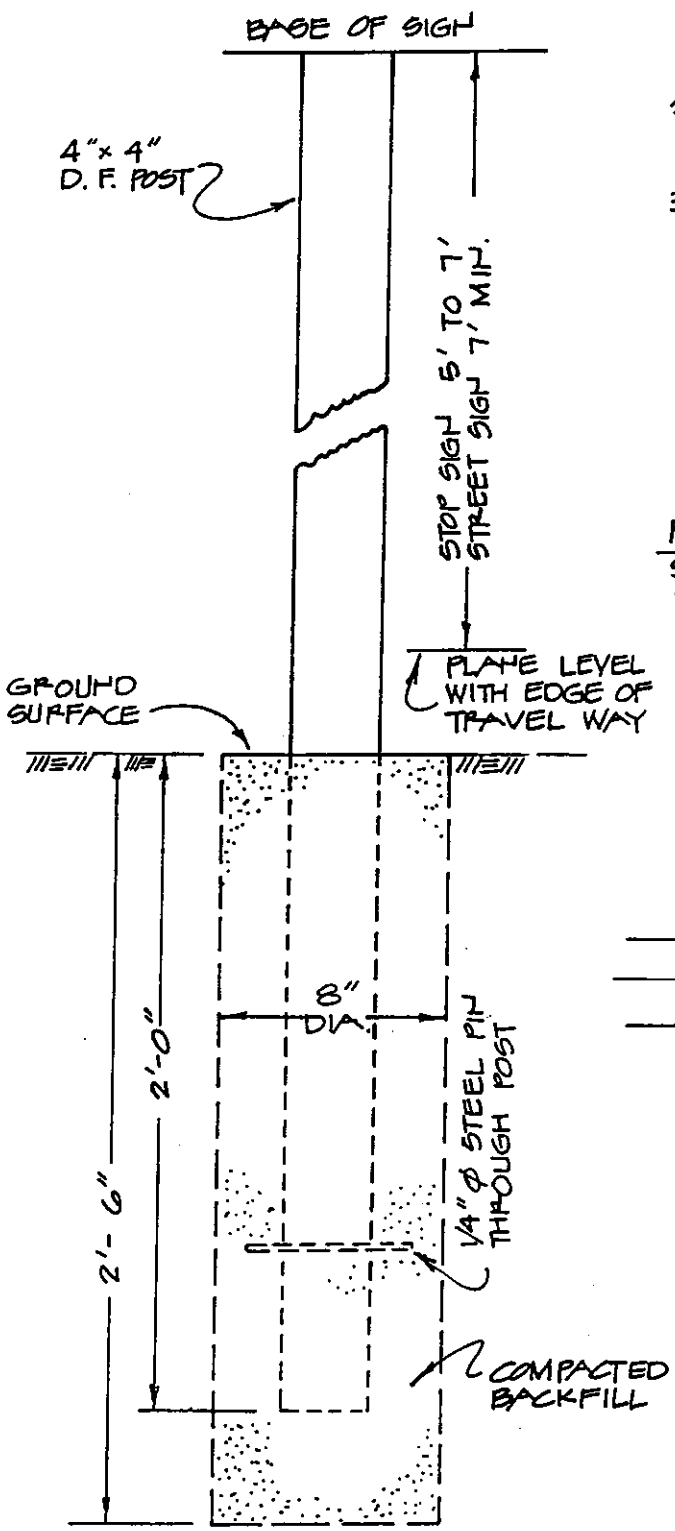

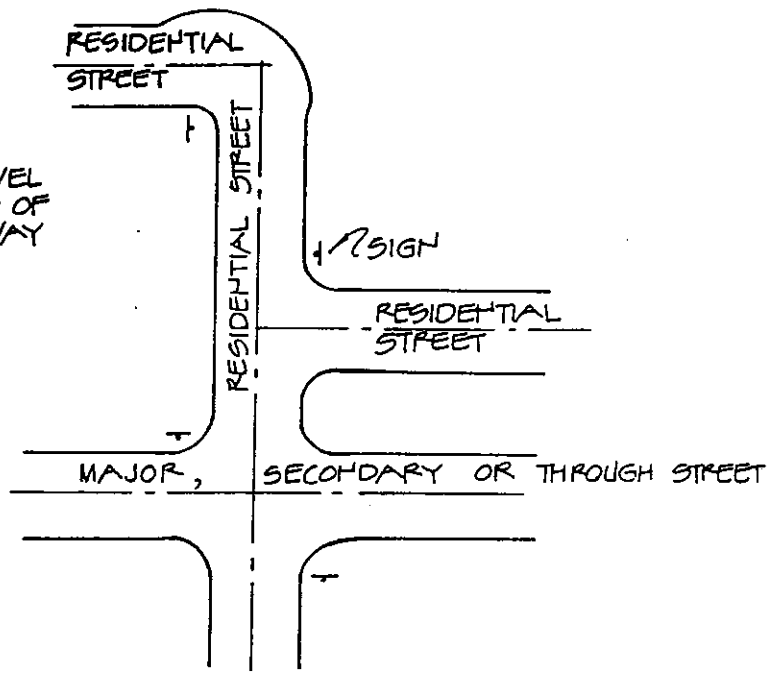

SIGN LOCATION DIAGRAMS

DEPARTMENT OF PUBLIC WORKS	CITY OF ANGELS STANDARD STREET AND STOP SIGN POST DETAILS N. T. S.				ST-6
			2/24/81	R.T.V.	
		REV.	DATE	BY	

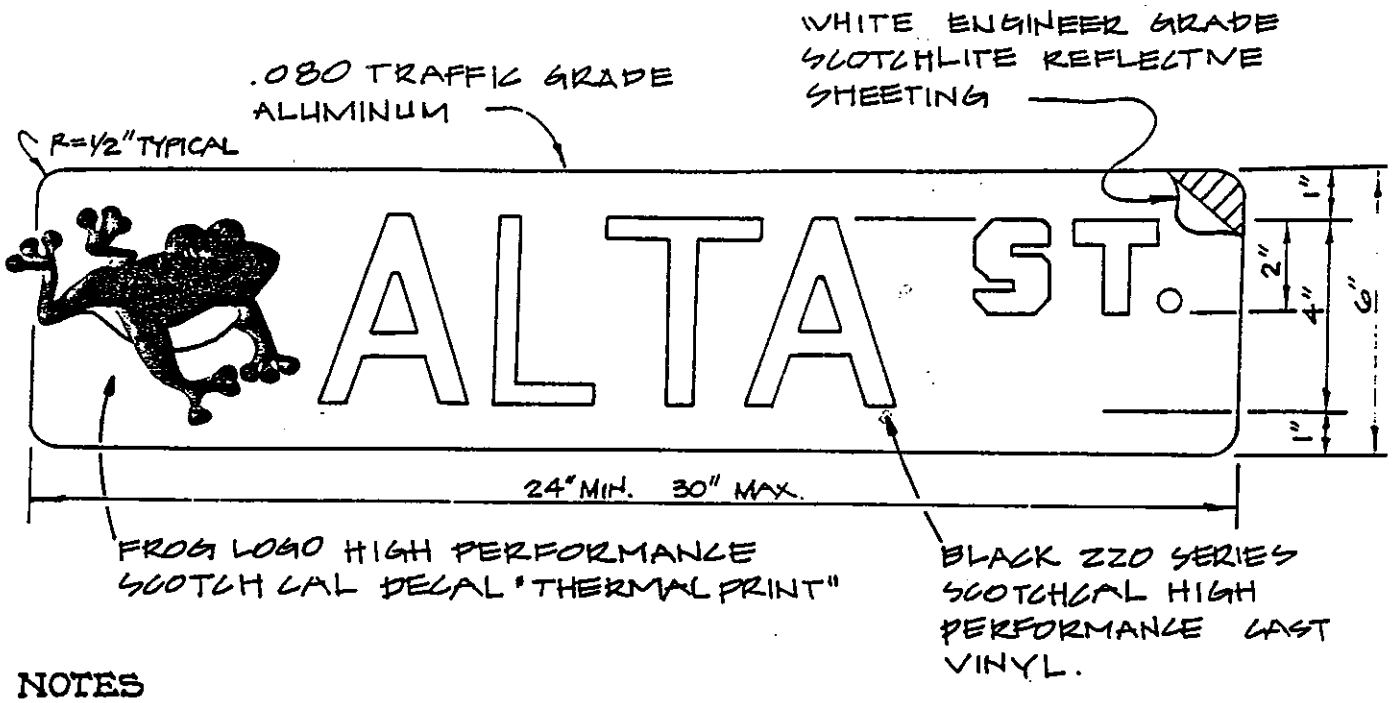

NOTES

1. REFLECTIVE LETTERS SHALL BE MECHANICALLY APPLIED PER MANUFACTURER'S SPECIFICATIONS.
2. SIGNS SHALL BE PRINTED ON BOTH SIDES.
3. HARDWARE FOR MOUNTING SIGNS SHALL BE HAWKINS-HAWKINS, V14(HD) SL-105 CROSS PIECE AND V14(HD)SL-2C-CAP, POST CAP, OR EQUAL.
4. SIGNS SHALL BE MOUNTED ON 2" I.D. GALV. PIPE SET 3 FT. IN GROUND, 8 FT. OFF THE TRAVELED WAY WITH THE BASE OF THE SIGN 7 FT. ABOVE THE EDGE OF THE TRAVELED WAY.
5. ALLEN HEAD SET SCREWS AFFIXING THE SIGN TO THE HARDWARE & CAP TO THE PIPE SHALL BE TIGHTENED, WITH THE HOLES THEN BEING FILLED WITH A "LIQUID METAL," IN SUCH A MANNER THAT THEIR REMOVAL IS RENDERED IMPOSSIBLE.
6. SEE STD. POST DETAIL DRAWING.
7. CENTER LETTERS ON SIGN AND LEAVE 1/2" MIN. MARGIN ON BOTH ENDS.
8. SIGNS SHALL BE "SAFE-T-LITE" OR APPROVED EQUAL.

DEPARTMENT OF PUBLIC WORKS	CITY OF ANGELS STANDARD STREET SIGN DETAIL N. T. S.				ST-7
			6/23/98	G.G.	
			2/24/81	R.T.W.	
		REV.	DATE	BY	

DRIVEWAY APPROACHES

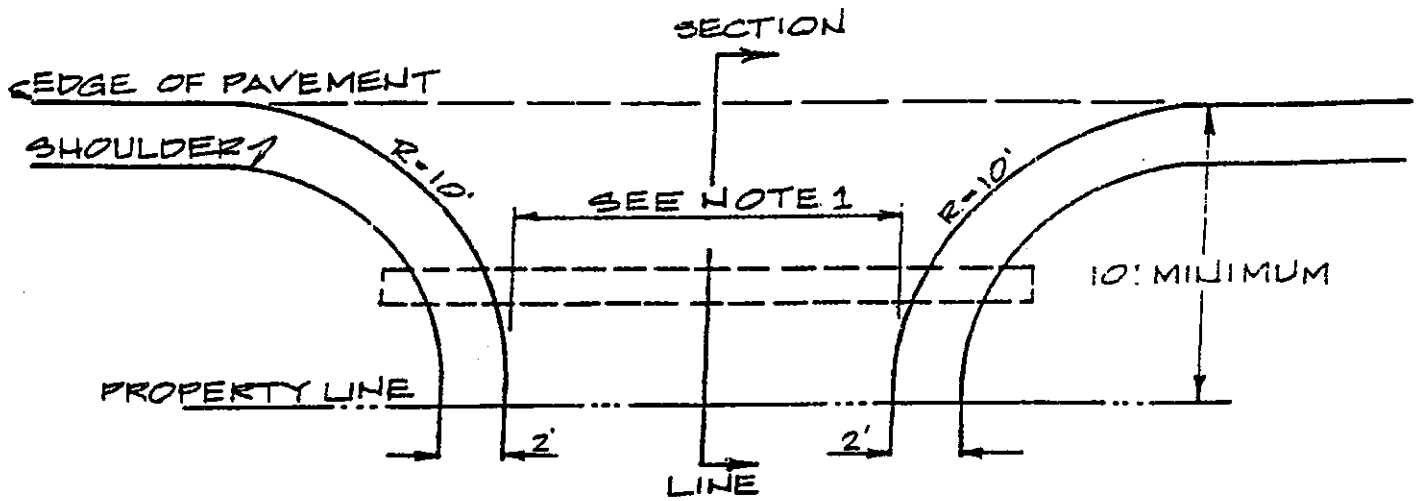

TYPICAL SECTIONS
(SEE NOTE 3)

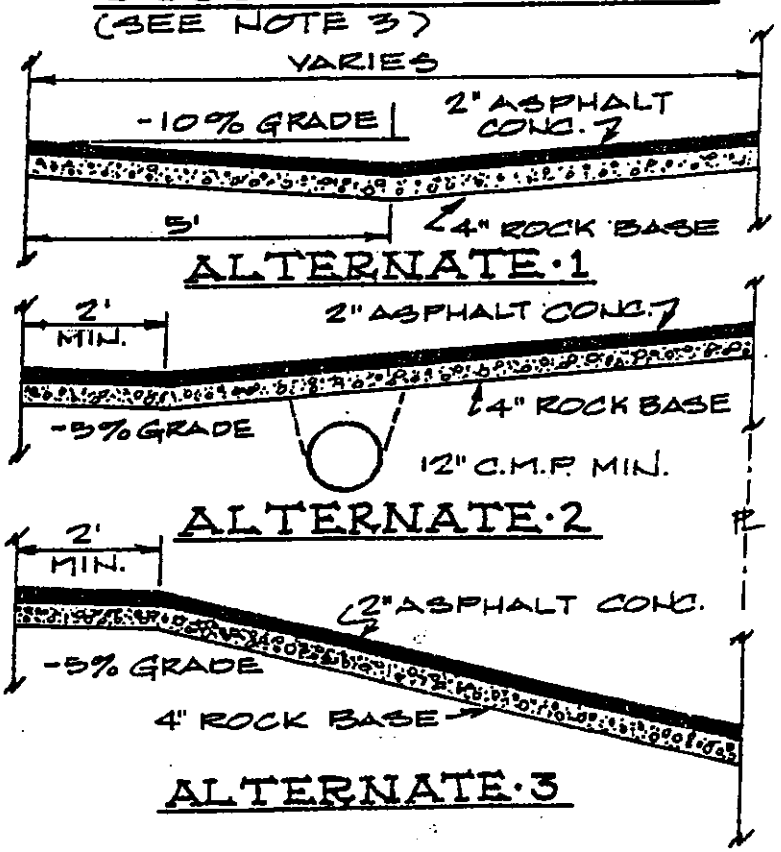

NOTES

1. 12' MIN. RESIDENTIAL DRIVEWAY WIDTH, 24' MIN. COMMERCIAL DRIVEWAY WIDTH.
2. ASPHALT CONC. SURFACE MAY BE OMITED IF NOT LESS THAN 4" OF CONCRETE IS USED. 6" OF CONCRETE IN ALL COMMERCIAL DRIVEWAYS.
3. FOR APPROACHES WHERE CURB & GUTTER ARE EXISTING SEE DETAIL SW-2 FOR STANDARD DRIVEWAY APPROACH.
4. CULVERTS SHALL BE SIZED BY CITY ENGINEER.

DEPARTMENT OF PUBLIC WORKS	CITY OF ANGELS STANDARD DRIVEWAY APPROACHES N.T.S.	REV.	DATE	BY	ST-8

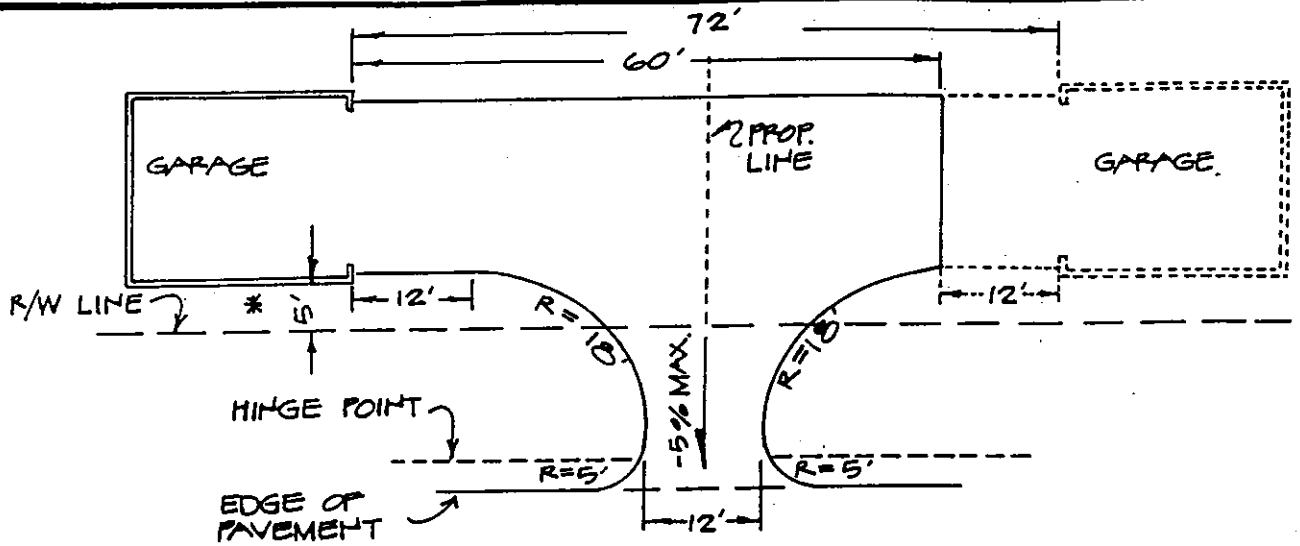

NOTE: PROPERTY LINE AT CENTERLINE OF DRIVEWAY ONLY WHEN BOTH OWNERS USE SAME DRIVEWAY.
* DEPENDING ON SETBACK REQUIREMENT.

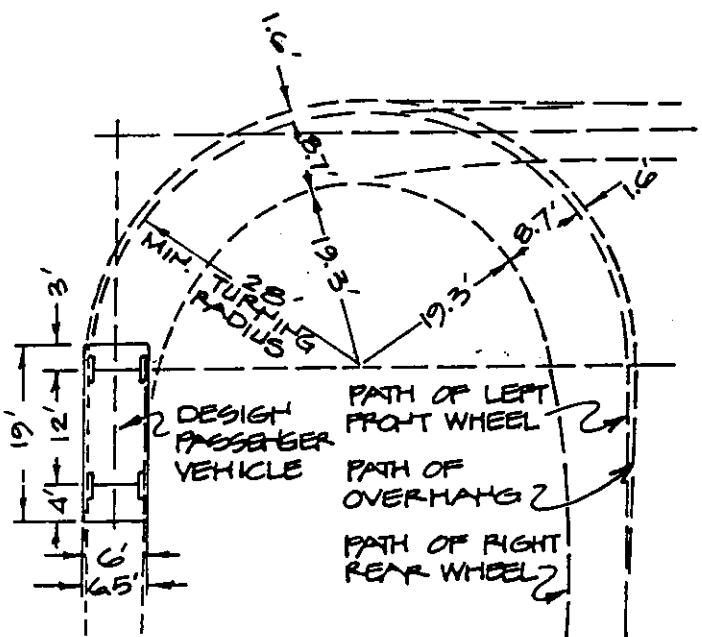

OTHER DRIVEWAY DESIGNS MAY BE APPROVED BASED ON THIS STANDARD

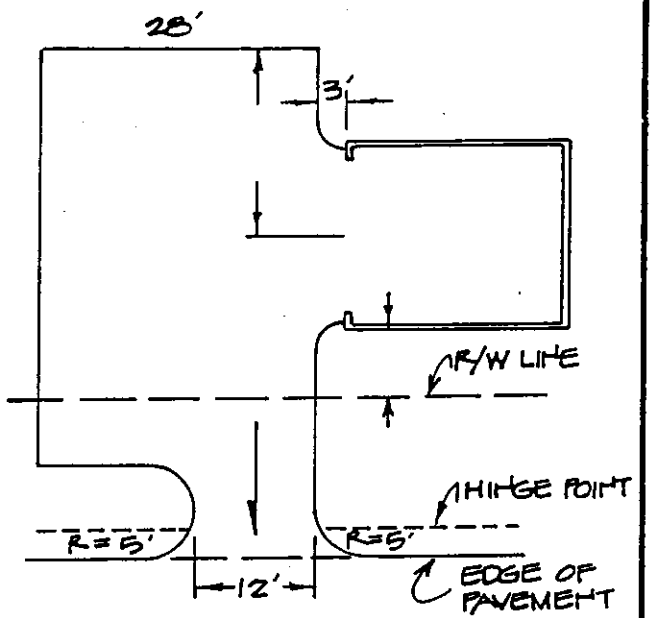

NOTE: THESE STANDARDS APPLY ONLY WHEN GARAGE AND TURNING AREA ARE NEAR ROAD GRADE & NEAR R/W.

DEPARTMENT OF PUBLIC WORKS	CITY OF ANGELS STANDARD DRIVEWAYS FOR HILLSIDE LOTS NEW SUBDIVISIONS SCALE: 1" = 20'				ST-9
			2/24/81	R.T.W.	
		REV	DATE	BY	

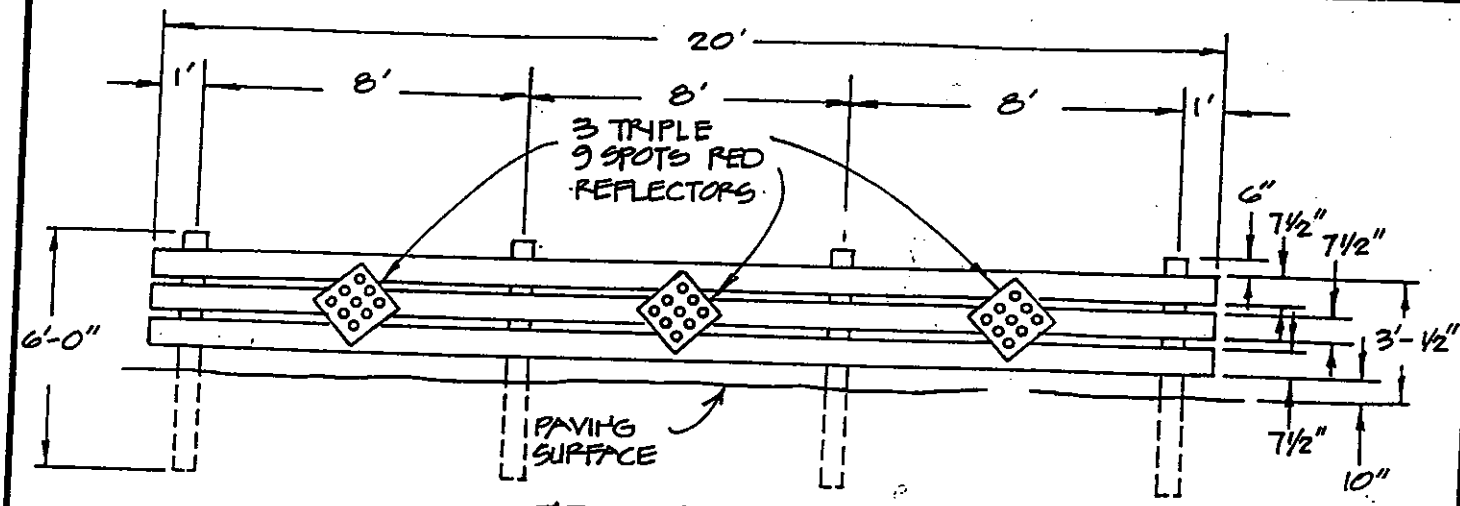

FRONT VIEW

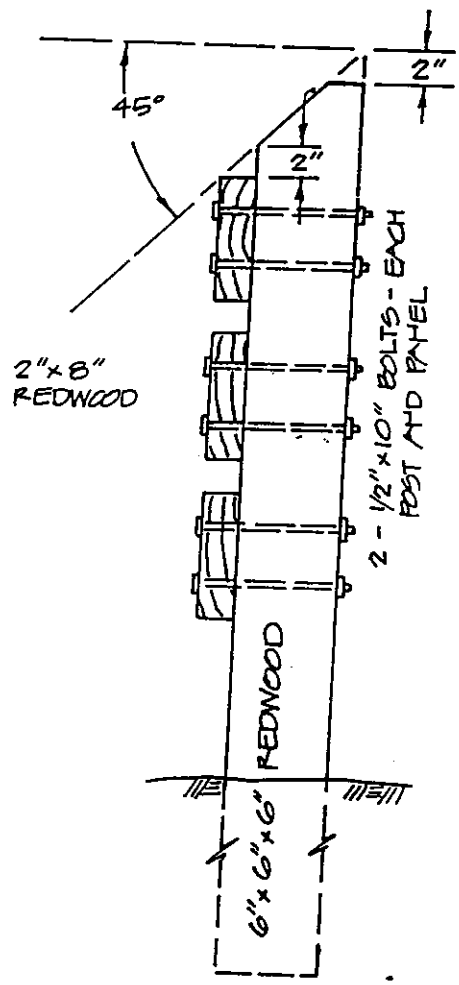

SIDE VIEW

NOTE: PANEL SHALL BE CONSTRUCTED ACROSS FULL RIGHT OF WAY WIDTH WHERE REQUIRED.
3 TRIPLE 9 SPOTS RED REFLECTORS AS SHOWN.

DEPARTMENT OF PUBLIC WORKS	CITY OF ANGELS STANDARD GUARD PANEL				ST-10
			2/24/81	R.T.W.	
		REV.	DATE	BY	

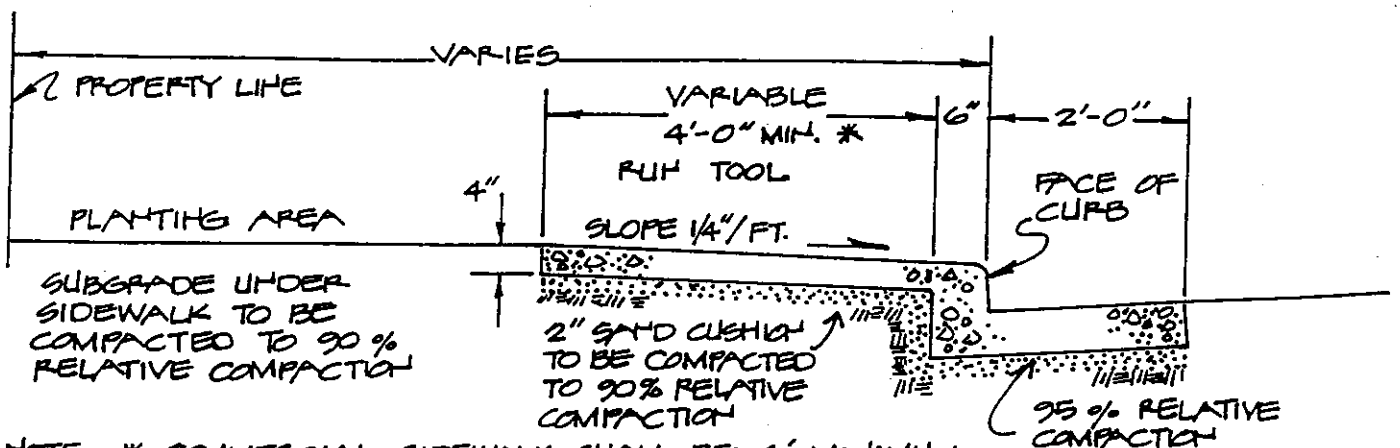

NOTE: * COMMERCIAL SIDEWALK SHALL BE 6' MINIMUM.
FOR DRIVEWAY DETAIL SEE STD. SW-2

SECTION: STANDARD VERTICAL CURB

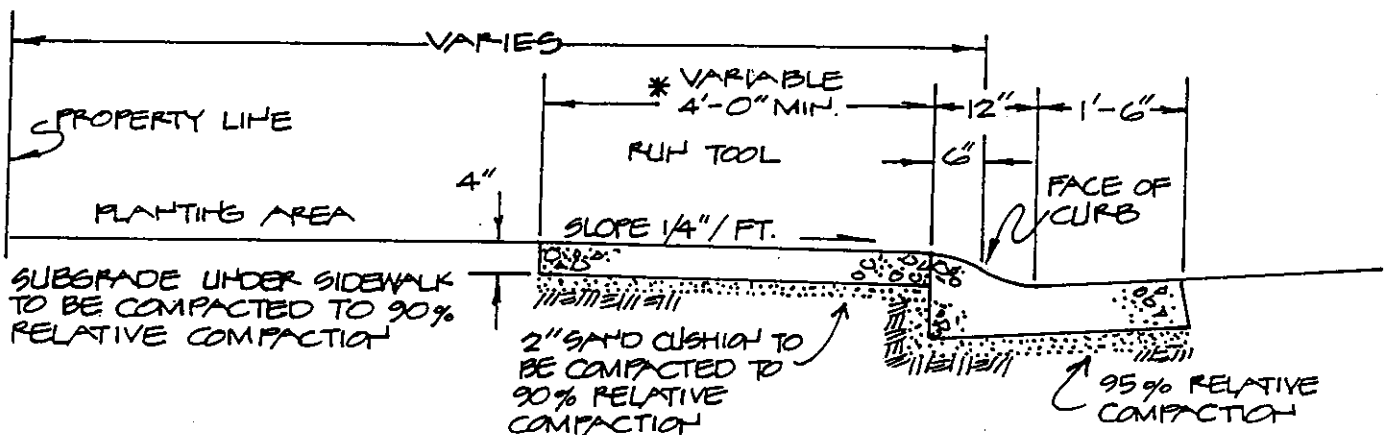

SECTION: STANDARD ROLLED CURB

NOTE 1) EXPANSION JOINTS NOT TO EXCEED 60' APART.
DISTANCE BETWEEN SCORE LINE NOT TO EXCEED 4' IN TRANSVERSE DIRECTION.
ALL CURB, GUTTER & SIDEWALK SHALL HAVE A LIGHT BROOM FINISH.

2) FL OF GUTTER TO BE SMOOTH FINISH - STEEL FLOAT.

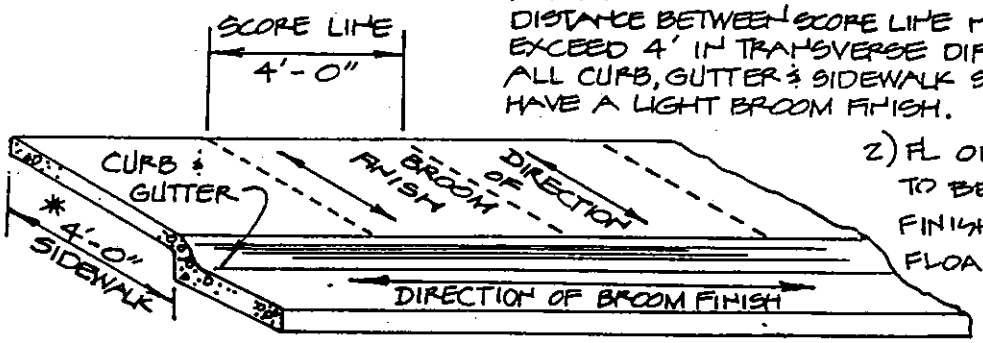

DETAIL: SIDEWALK SCORE LINES

DEPARTMENT OF PUBLIC WORKS	CITY OF ANGELS STANDARD CURB, GUTTER & SIDEWALK N. T. S.	REV.	DATE	BY	SW-1
			3/10/98	GG	
			2/24/81	R.T.W.	

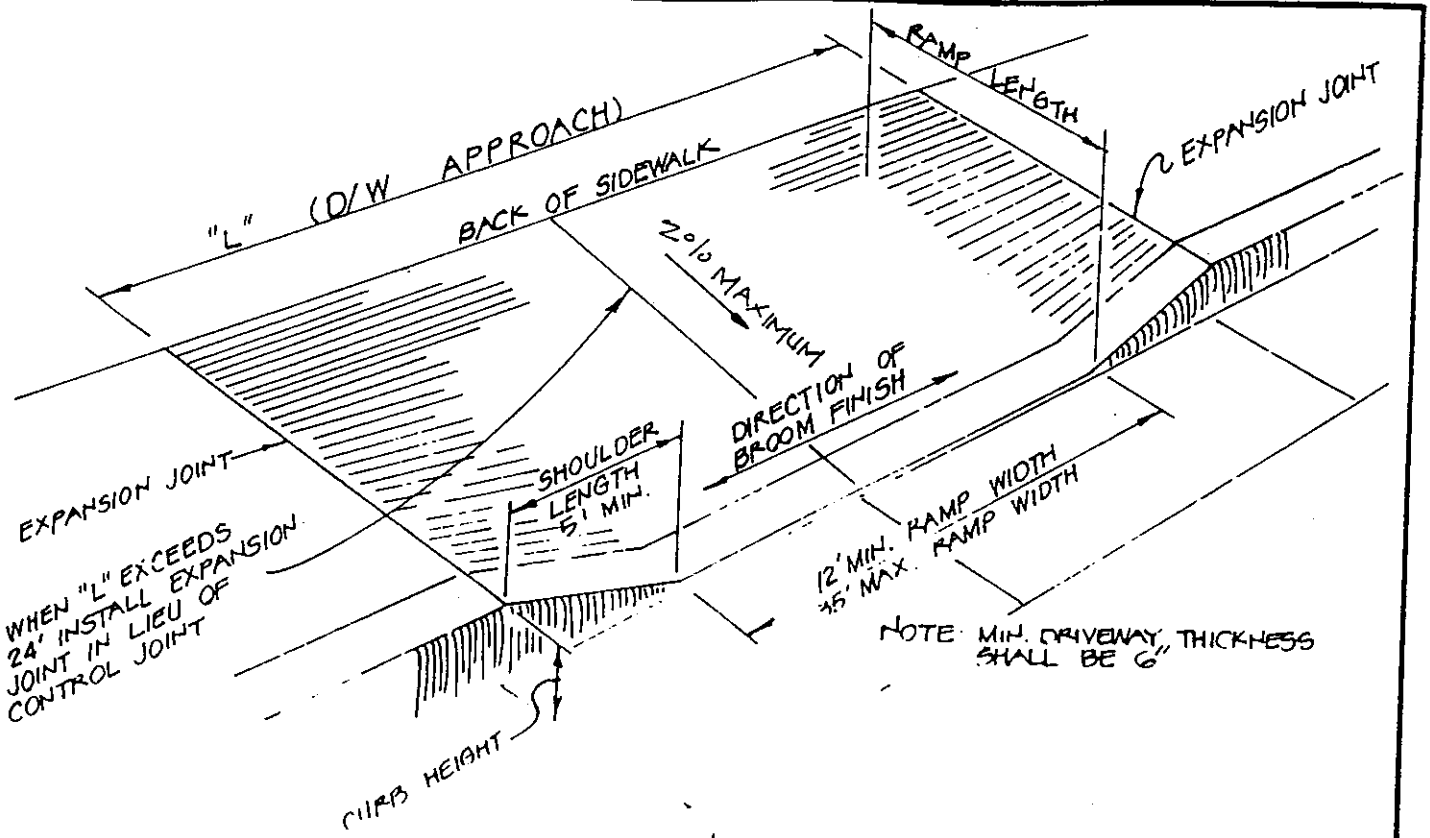

NOTE: SHOULDER LENGTH 60" FOR PARKING LOTS WITH MORE THAN 10 PARKING SPACES.

* NOTE: ALL COMMERCIAL DRIVEWAYS SHALL HAVE A MINIMUM SIDEWALK WIDTH OF 6 FEET.

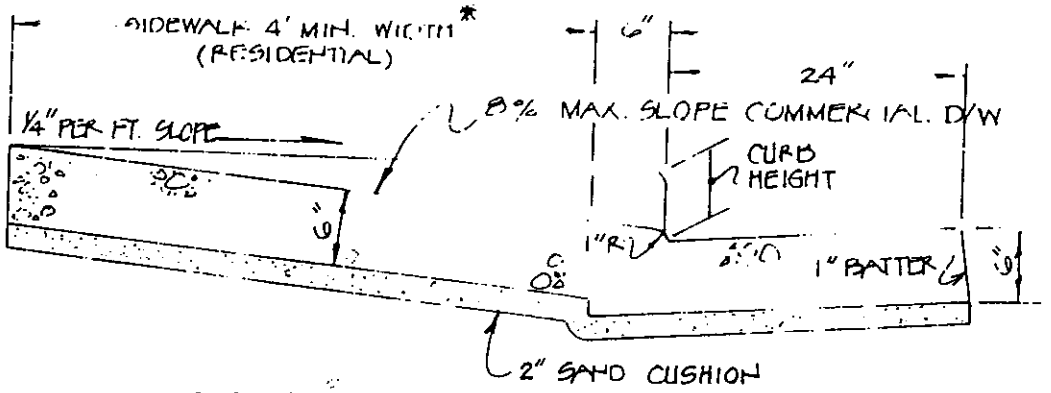

SECTION THRU DRIVEWAY APPROACH

APPROACH AND GUTTER POURED TOGETHER

DEPARTMENT OF PUBLIC WORKS	CITY OF ANGELS STANDARD DRIVEWAY APPROACH DETAIL N.T.S.	REV.	DATE	BY	SW-2
			3/10/98	G.G.	
			2/24/81	R.T.W.	

SECTION
ROLL CURB & GUTTER

1 L.F. = 1.44 CU. FT.

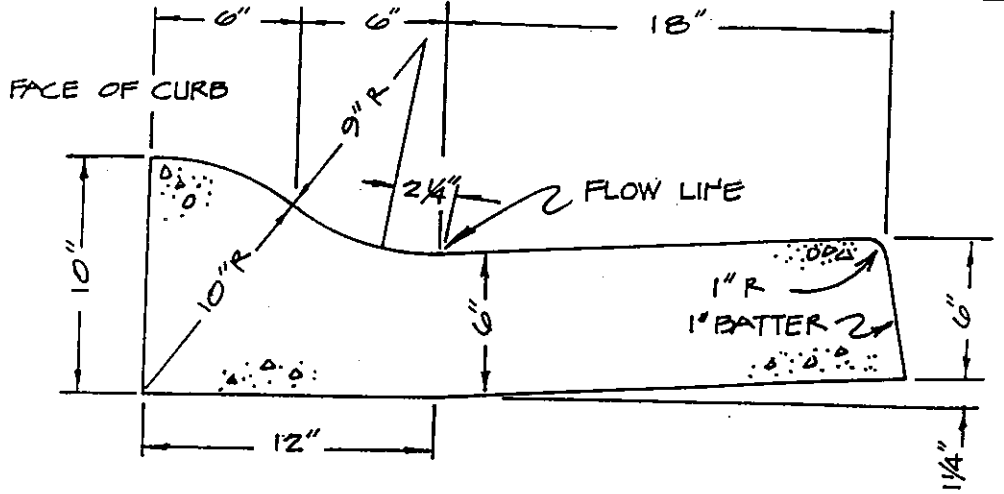

SECTION
VERTICAL CURB & GUTTER

1 L.F. = 1.46 CU. FT.

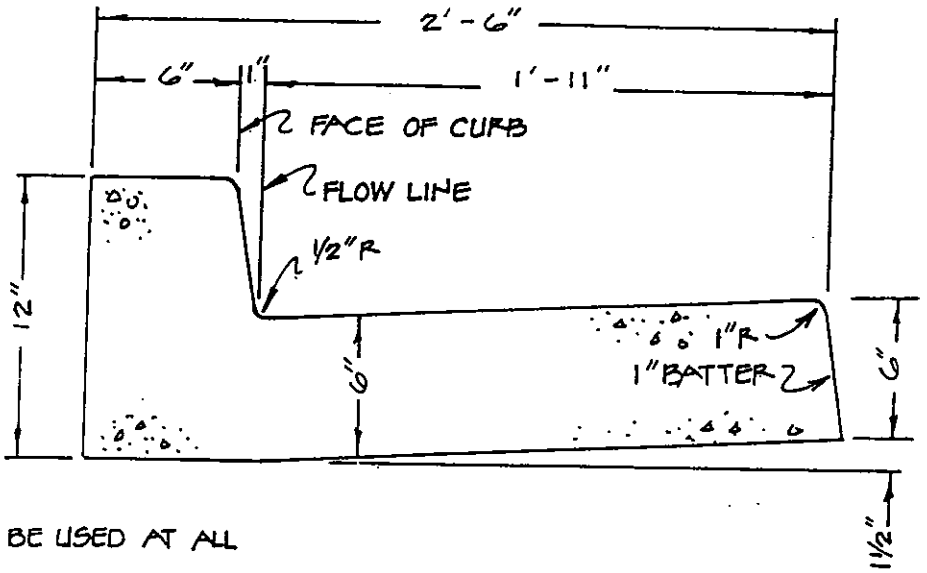

NOTES

1. VERTICAL CURB & GUTTER TO BE USED AT ALL CURB RETURNS.
2. 1/4" EXPANSION JOINT AT BOTH ENDS & MIDPOINT OF CURB RETURN.
3. 1/4" WIDE EXPANSION JOINTS MAX. INTERVAL 60'
4. 1/8" SCORED CONTROL JOINTS MAXIMUM INTERVAL 24'.
5. GUTTER PAN WIDTH MAY BE REDUCED SUBJECT TO APPROVAL OF CITY ENGINEER.

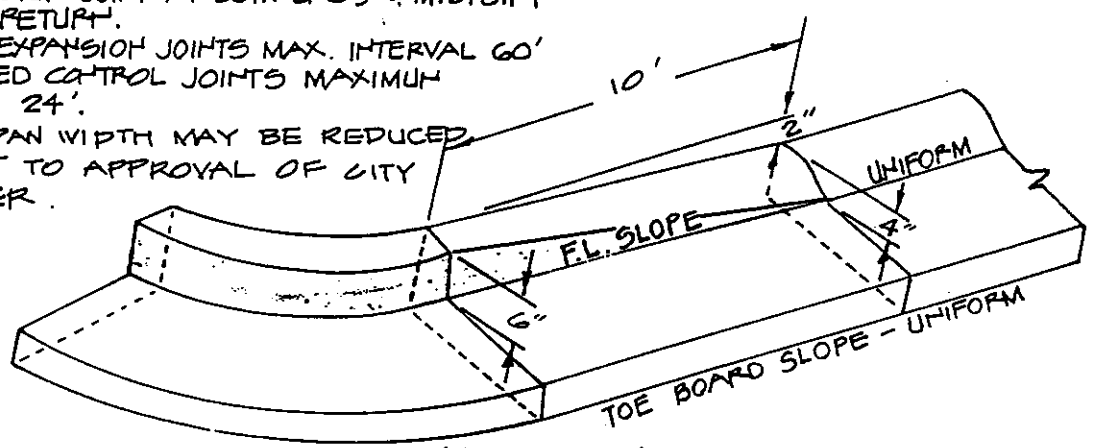

DETAILS

TRANSITION FROM ROLLED CURB & GUTTER TO VERTICAL CURB & GUTTER AT CURB RETURNS

DEPARTMENT OF PUBLIC WORKS	CITY OF ANGELS STANDARD VERTICAL & ROLL CURB & GUTTER N.T.S.	REV.	DATE	BY	SW-3
			12/5/85	RTW	
			2/24/81	R.T.W.	

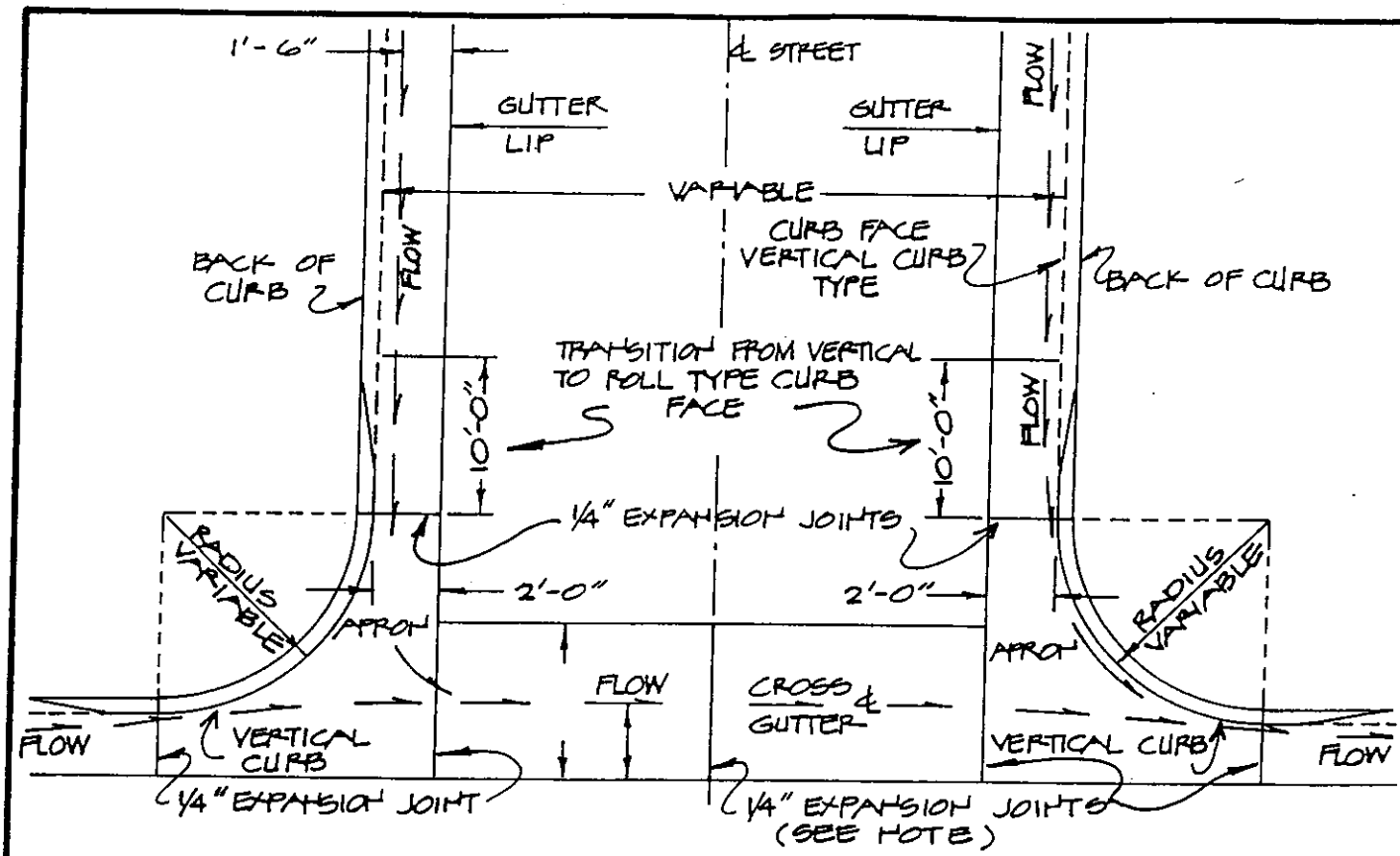

NOTES: ALL APRON SHALL BE CLASS "A" CONCRETE 6" THICK THROUGHOUT.

VERTICAL FACE TYPE CURB SHALL BE USED ON ALL STREETS ANY PORTION OF WHICH, INTERSECTION TO INTERSECTION, HAS A GRADE OF 3% OR GREATER AND AT ALL CURB RETURNS AT STREET INTERSECTIONS.

EXPANSION JOINTS SHALL BE PLACED AT EACH END OF CROSS GUTTERS AND AT MID-SPAN PERPENDICULAR TO THE LONGITUDINAL AXIS, AND AT BOTH END ENDS OF ALL CURB RETURNS.

CROSS GUTTERS ARE TO BE USED ONLY WHEN OTHER DRAINAGE SOLUTIONS ARE UNAVAILABLE

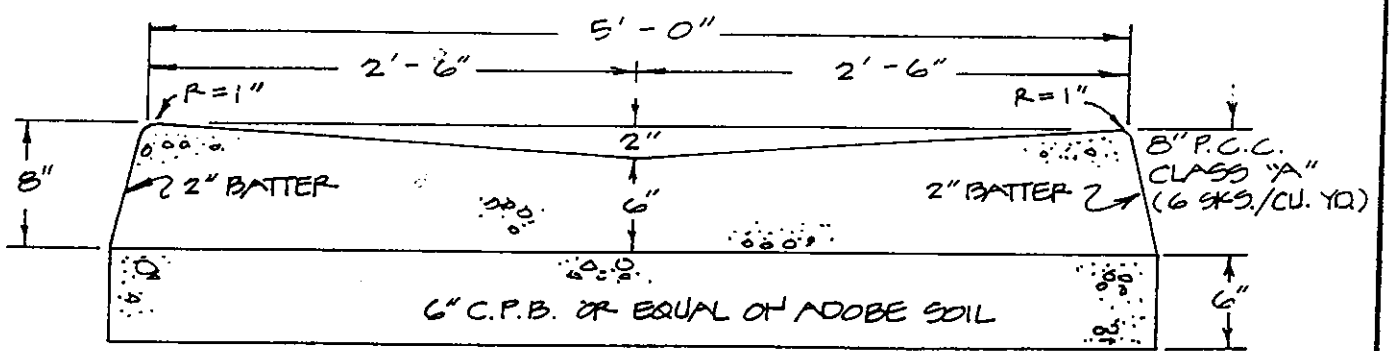

TYPICAL: CROSS-GUTTER

DEPARTMENT OF PUBLIC WORKS	CITY OF ANGELS STANDARD CROSS GUTTER & INTERSECTION PLAN N.T.S.	REV.	DATE	BY	SW-4
			2/24/81	R.T.W.	

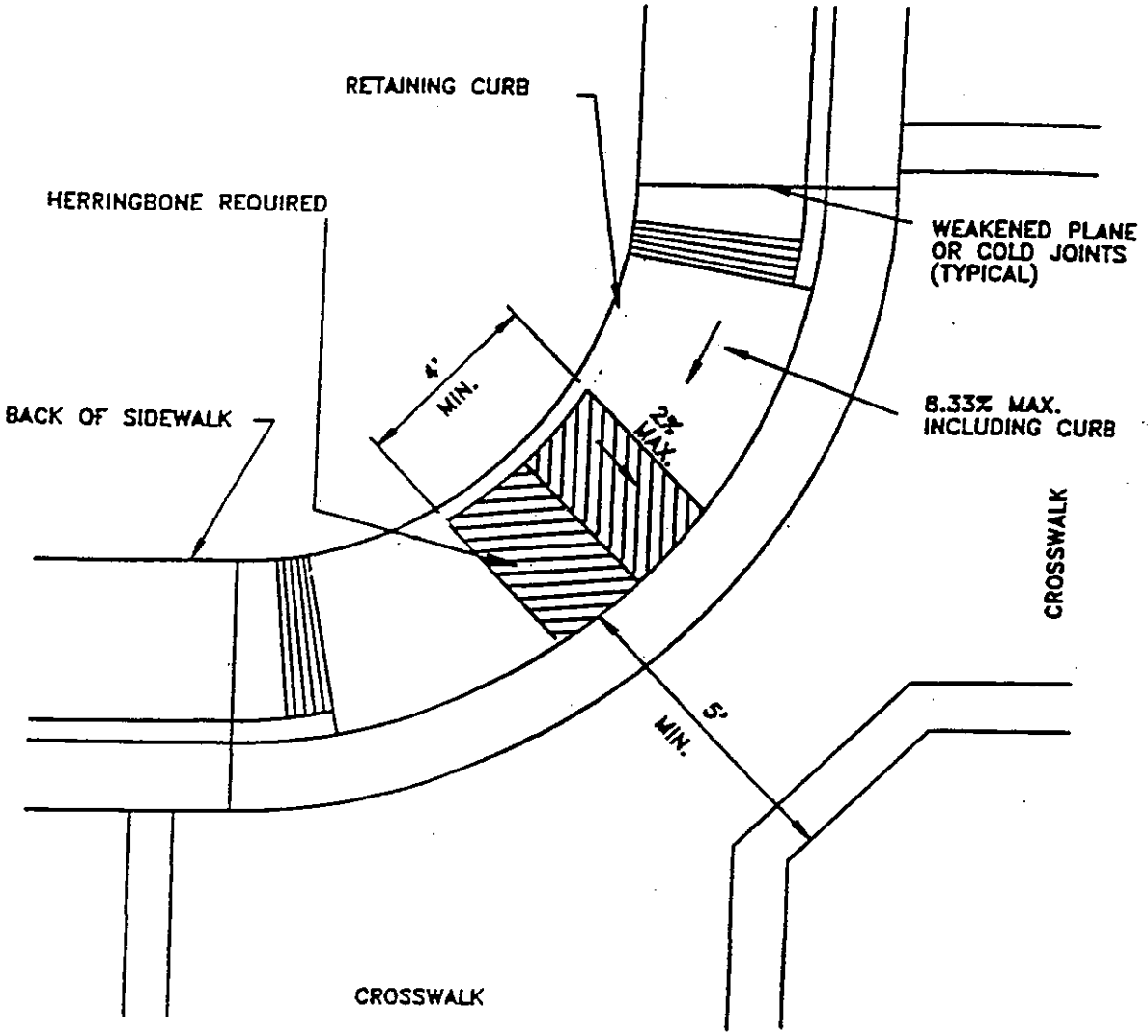

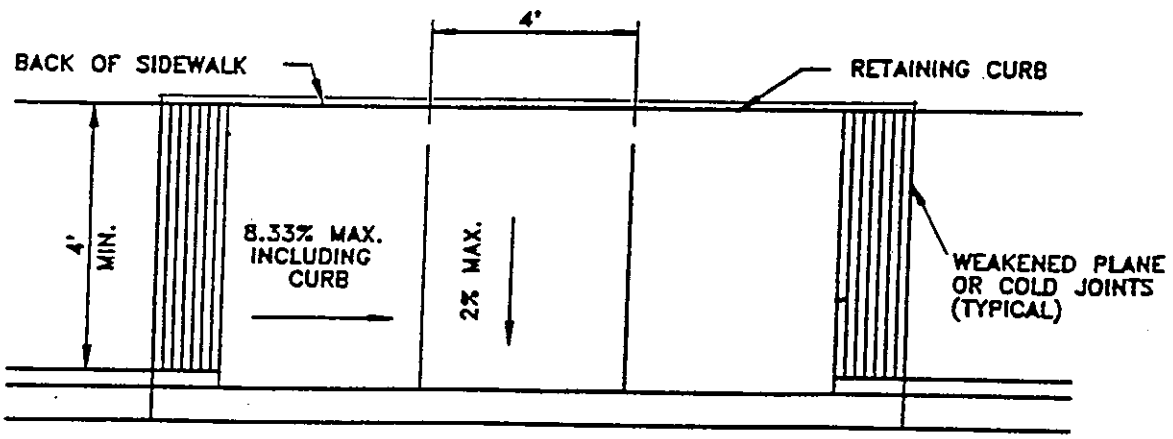

NOTES:

1. 8.33% IS 1 IN 12
2. ALL COMMERCIAL SIDEWALKS TO BE 6' MINIMUM.

DEPARTMENT OF PUBLIC WORKS	CITY OF ANGELS STANDARD PEDESTRIAN (WHEEL CHAIR) RAMP N.T.S.				SW-5
		REV.	DATE	BY	

CALIFORNIA CONCRETE PIPE

PART No.	ITEM	WT.
640	ASSY.	270
641	FRAME	142
642	COVER	128

OR EQUAL

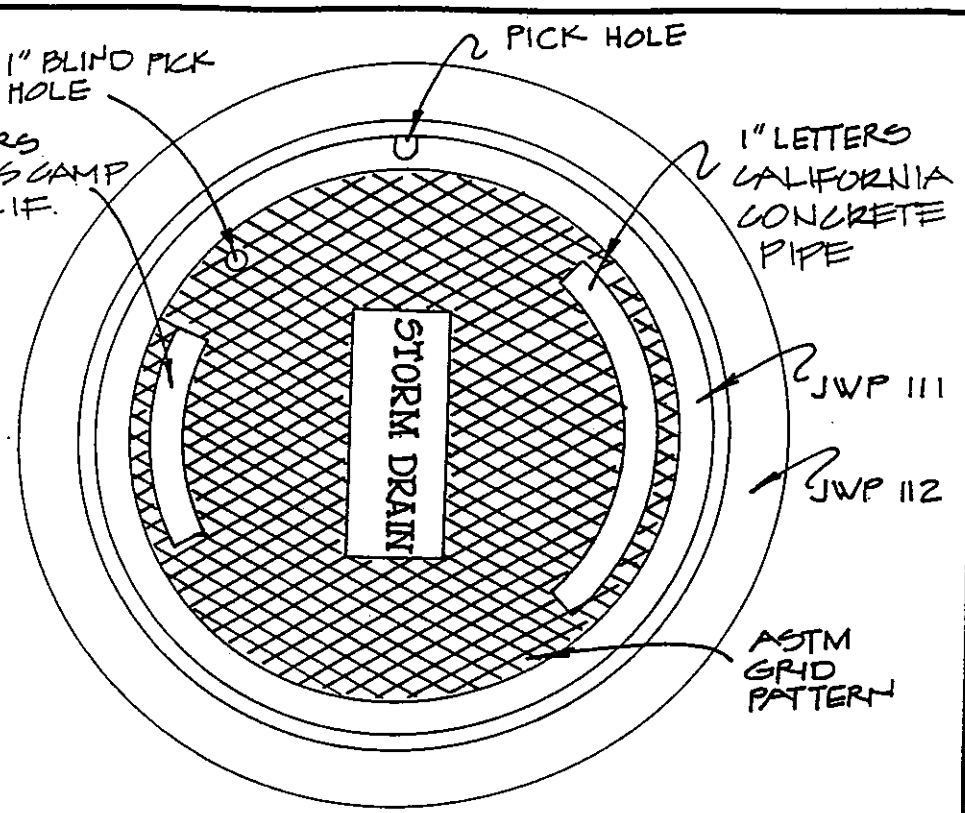

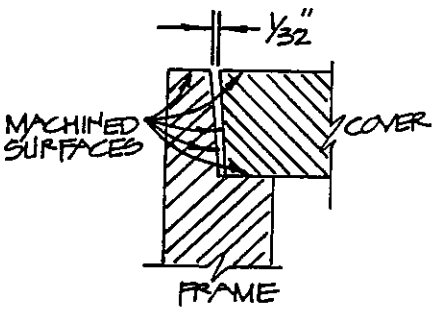

MACHINED FOR PERFECT NON-ROCK FIT

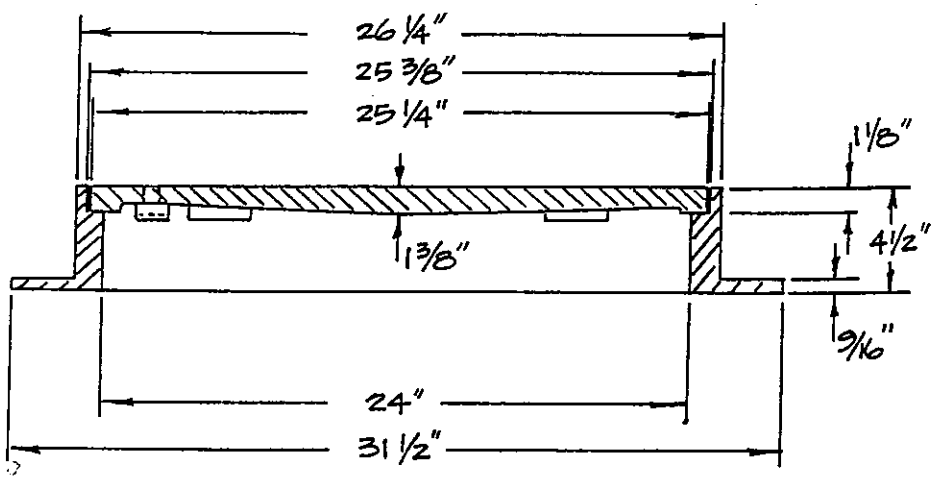

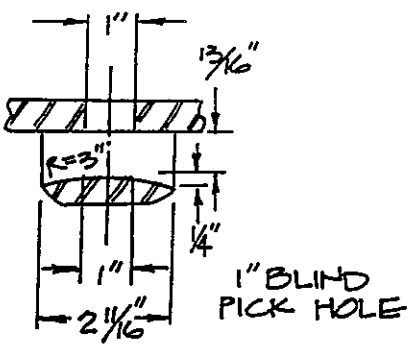

DEPARTMENT OF PUBLIC WORKS	CITY OF ANGELS **STORM DRAIN MANHOLE**				SD-1
			3/10/98	GG	
			2/24/81	R.T.W	
		REV.	DATE	BY	

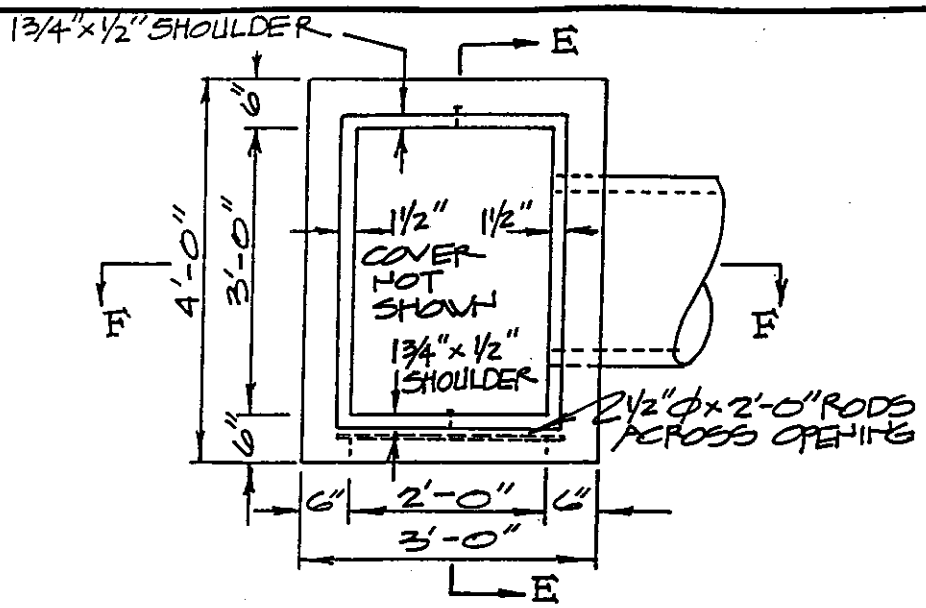

PLAN

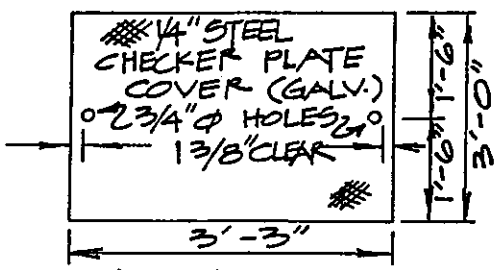

COVER PLAN
(WT. 74 lbs.)

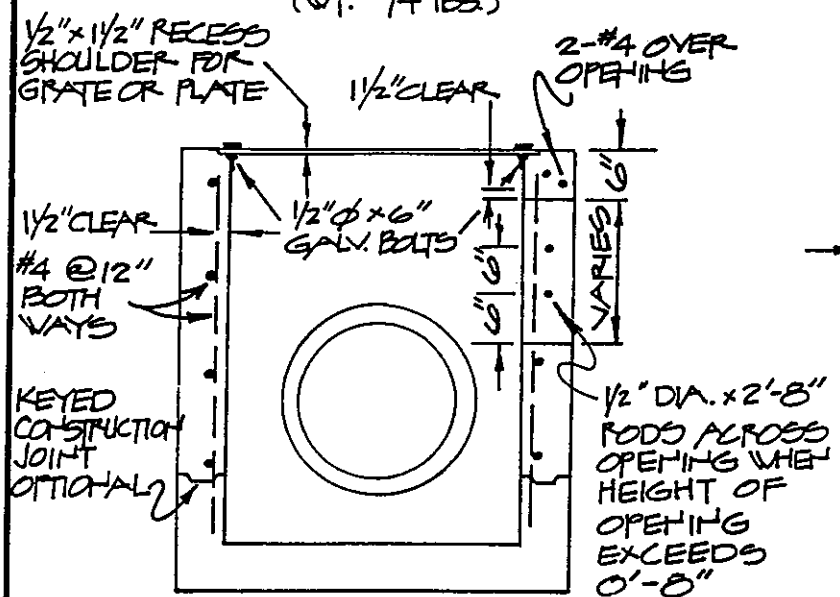

SECTION E-E

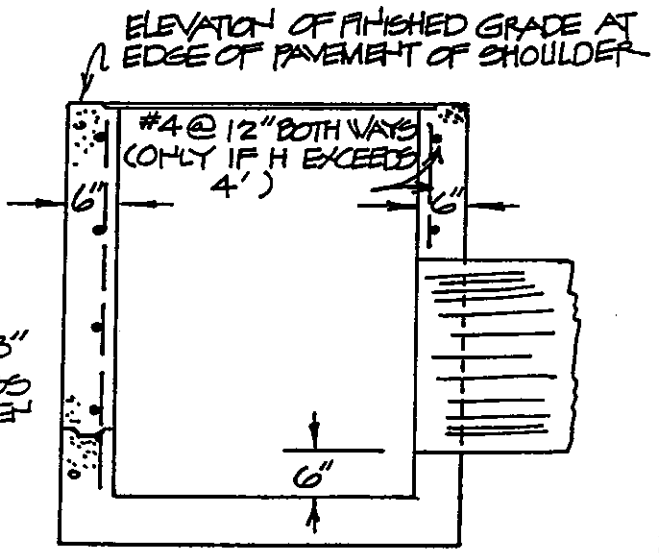

SECTION F-F

DEPARTMENT OF PUBLIC WORKS	CITY OF ANGELS STORM DRAIN JCN. BOX N. T. S.				SD-2
			2/24/81	R.T.W.	
		REV.	DATE	BY	

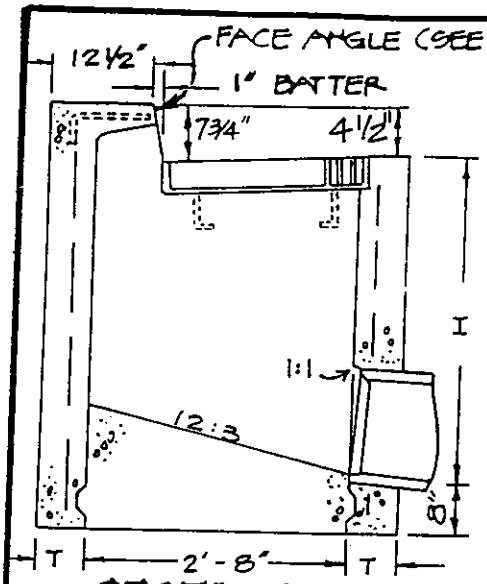

SECTION G-G

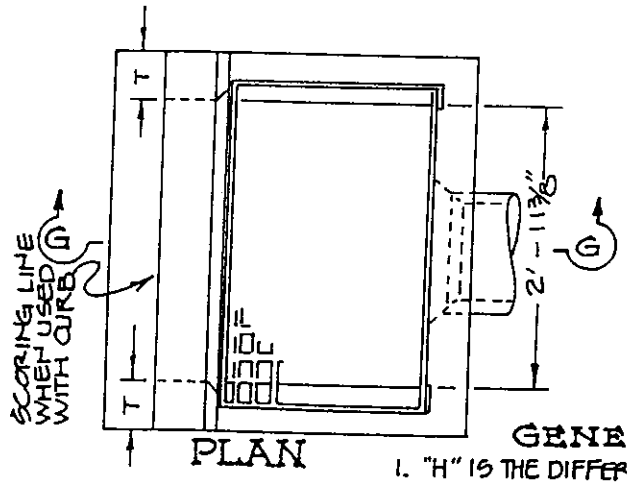

PLAN

H	T
8'-0" OR LESS	6"
8'-1" TO 20'-0"	6"

TABLE A

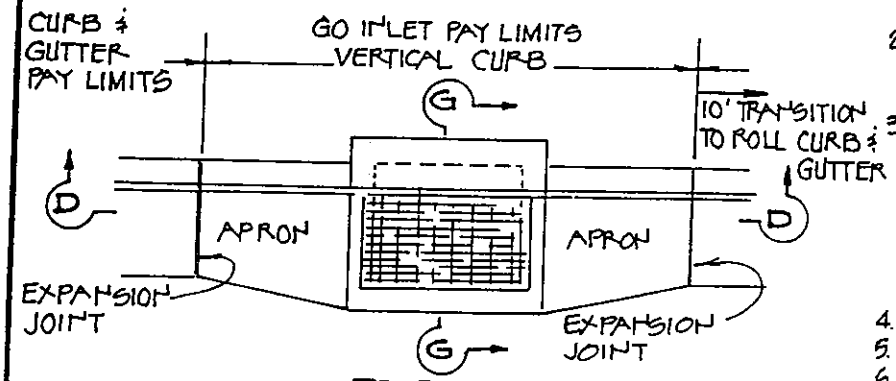

PLAN

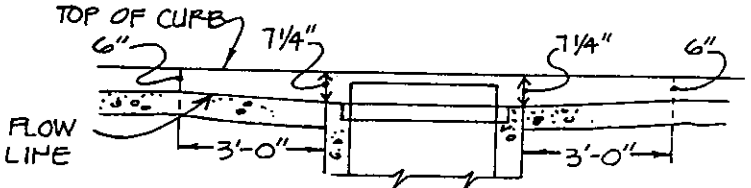

SECTION D-D

GENERAL NOTES

1. "H" IS THE DIFFERENCE IN ELEVATION BETWEEN THE OUTLET PIPE FLOW LINE AND THE NORMAL GUTTER GRADE LINE UNDEPRESSED.
2. REINFORCING STEEL IN WALLS SHALL BE #4 BARS AT 18"± CENTERS PLACED 1½" CLEAR TO INSIDE OF BOX UNLESS OTHERWISE SHOWN.
3. STEPS - NONE REQUIRED WHERE "H" IS 3'-6" OR LESS. INSTALL ONE STEP 16"± ABOVE FLOOR WHEN "H" IS MORE THAN 3'-6" AND LESS THAN 5'-0". WHERE "H" IS MORE THAN 5'-0", STEPS SHALL BE EVENLY SPACED AT 12"± INTERVALS FROM 16"± ABOVE FLOOR TO WITHIN 12"± OF THE TOP OF THE BOX. PLACE STEPS IN WALL WITHOUT PIPE OPENINGS.
4. PIPE(S) CAN BE PLACED IN ANY WALL.
5. CURB SECTION SHALL MATCH ADJACENT CURB.
6. BASIN FLOOR SHALL HAVE WOOD TROWEL FINISH AND A MINIMUM SLOPE OF 12:3 FROM ALL DIRECTIONS TOWARD OUTLET PIPE.
7. ALL HARDWARE SHALL BE GALVANIZED.
8. WHEN USING STANDARD ROLLED CURB & GUTTER WARP TO VERTICAL CURB 10'.
9. WHEN APRON IS REQUIRED WITH DROP-INLET EXTEND #4 SIDEWALL REBAR 12" INTO TAPERED GUTTER PAN.
10. DELETE APRON IN NON CURB & GUTTER AREAS.

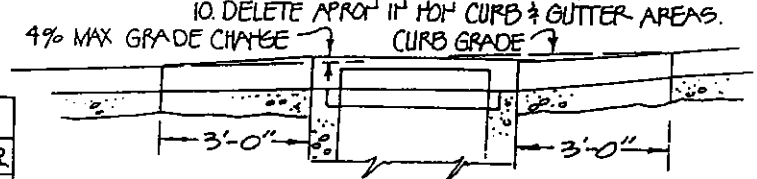

SLOPE SECTION

SLOPE NOTES	
D. I. GRADE	ROAD GR.
MATCH RD. GR. 4%	0 - 4%
4%	4 - 8%
HOLD 4% GR. CHANGE	8% - UP

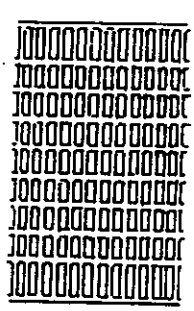

TYPE 24-12X GRATE

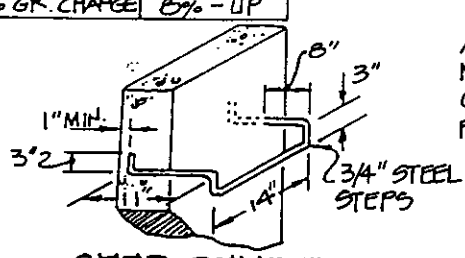

STEP DETAIL

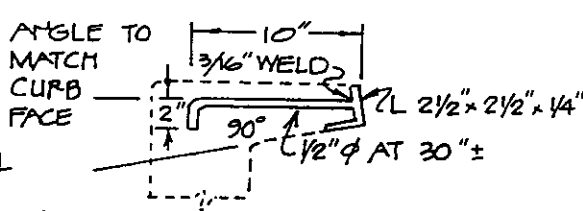

FACE ANGLE ANCHOR DETAIL

DEPARTMENT OF PUBLIC WORKS	CITY OF ANGELS STANDARD TYPE II DROP INLET N.T.S.	REV.	DATE	BY	SD-3
			3/10/98	GG	
			2/24/81	R.T.W.	

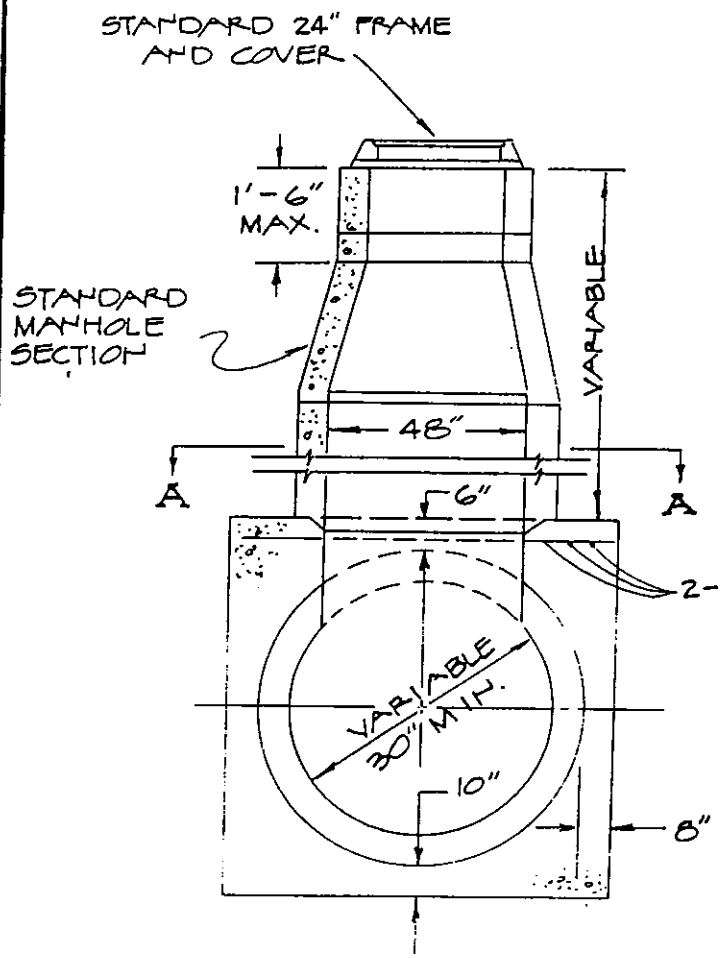

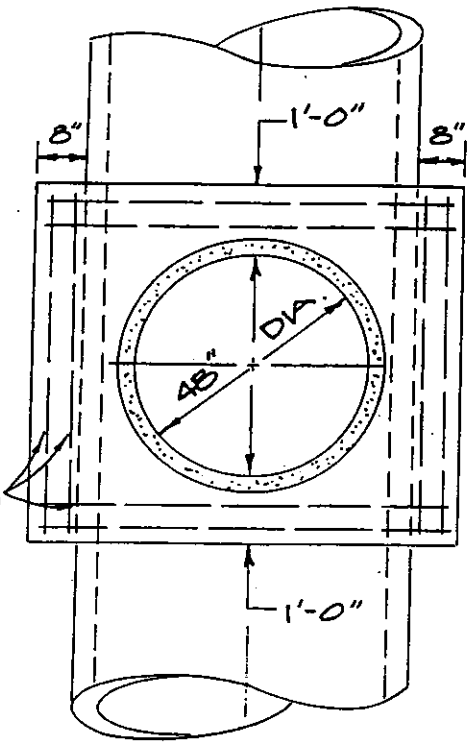

SECTION A-A

DEPARTMENT OF PUBLIC WORKS	CITY OF ANGELS STANDARD STORM DRAIN SADDLE M.H. N.T.S.				SD-4
			2/24/81	R.T.W.	
		REV	DATE	BY	

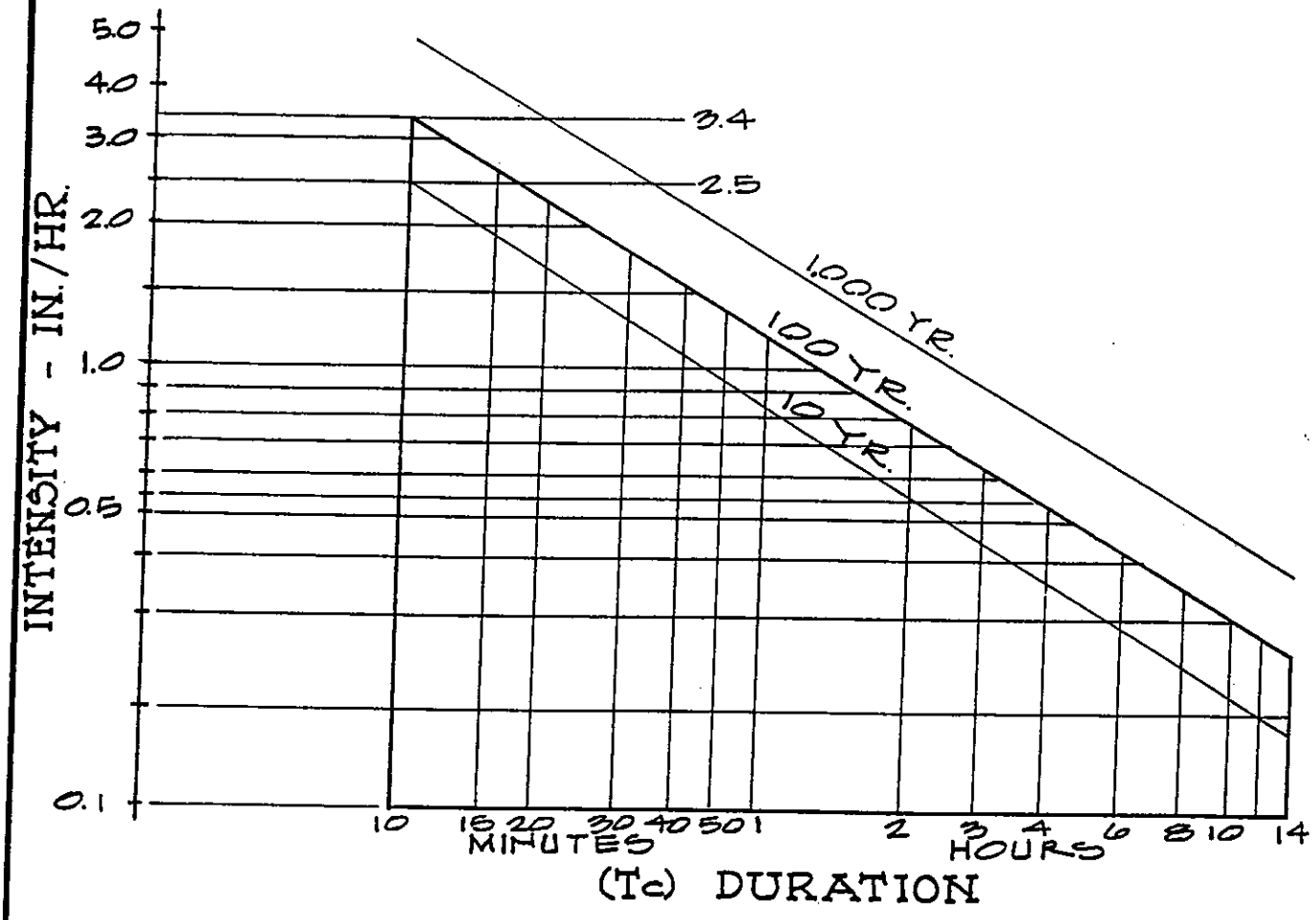

SLOPE	VELOCITY FT./SEC.		
	OVERLAND	UNPAVED CHANNEL	PAVED GUTTER
< -.005	.25	2-3	1.0-1.7
.005-.015	.50	3-6	1.7-3.0
.015-.030	.75	6-8	3.0-4.2
.030-.060	1.00	8-10	4.2-5.4
.060-.10	1.50	10-13	5.4-7.8
.10-.15	2.00	13-14	7.8-10
.15 - <	3.00	15	10

INSTRUCTIONS

1. SELECT VEL. FROM ABOVE TABLE.
2. $T_c = L/V \times 60$, SEE FIG. I-6 OF STREET AND HIGHWAY DRAINAGE VOL. I (ITTE)
3. IN CHART, GO VERTICAL TO STORM FREQUENCY CURVE DESIRED, THEN HORIZ. TO READ THE INTENSITY.

NOTE: CURVES ARE BASED ON DATA FROM P.G. & E. RAINFALL RECORDS & U.S. DEPT. OF COMMERCE PRECIP. FREQUENCY ATLAS FOR WESTERN U.S.

DEPARTMENT OF PUBLIC WORKS	CITY OF ANGELS RAINFALL INTENSITY CHART	REV.	DATE	BY	SD-5
				R.T.W.	

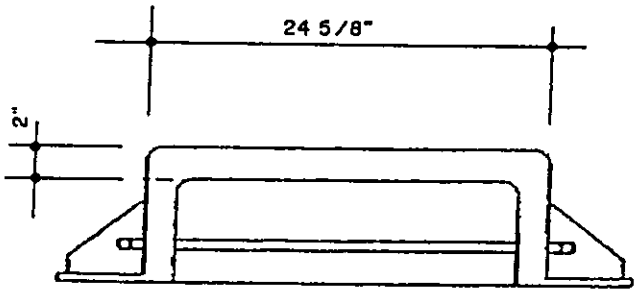

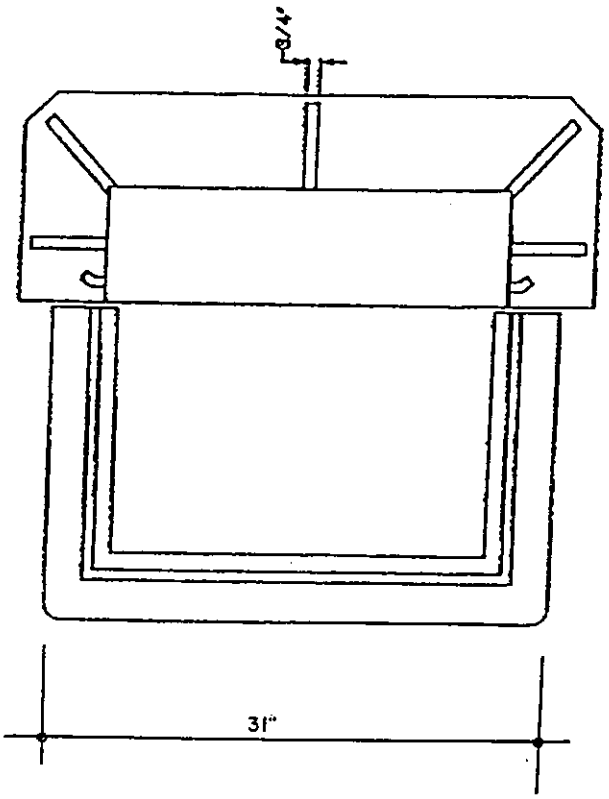

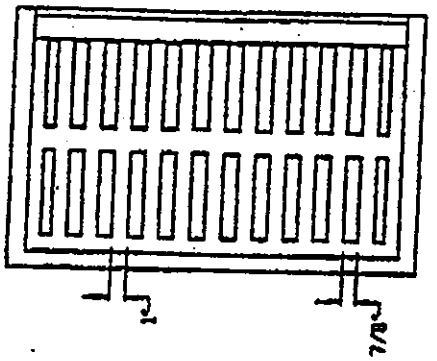

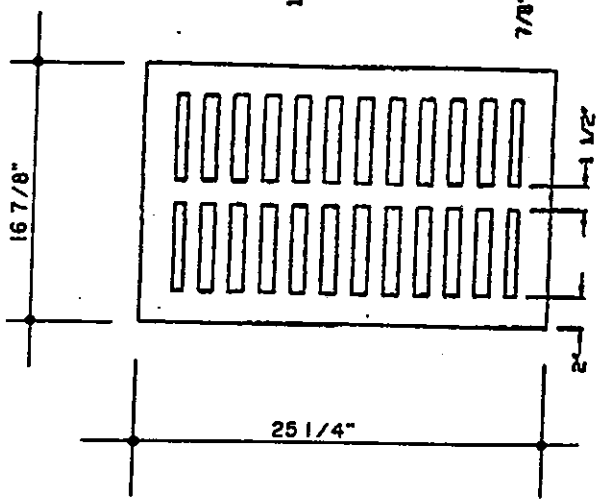

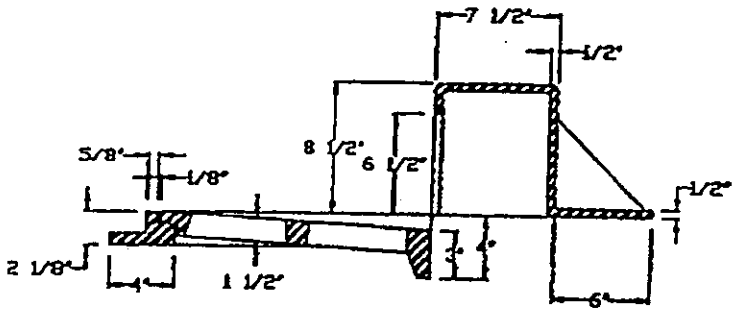

MFR. BY CALIFORNIA CONC. PIPE STOCKTON,CA. STD. DETAIL #A-279
MTRL. CAST IRON

DEPARTMENT OF PUBLIC WORKS	CITY OF ANGELS CURB INLET FRAME AND GRATE W/HOOD				SD-6
		REV.	DATE	BY	

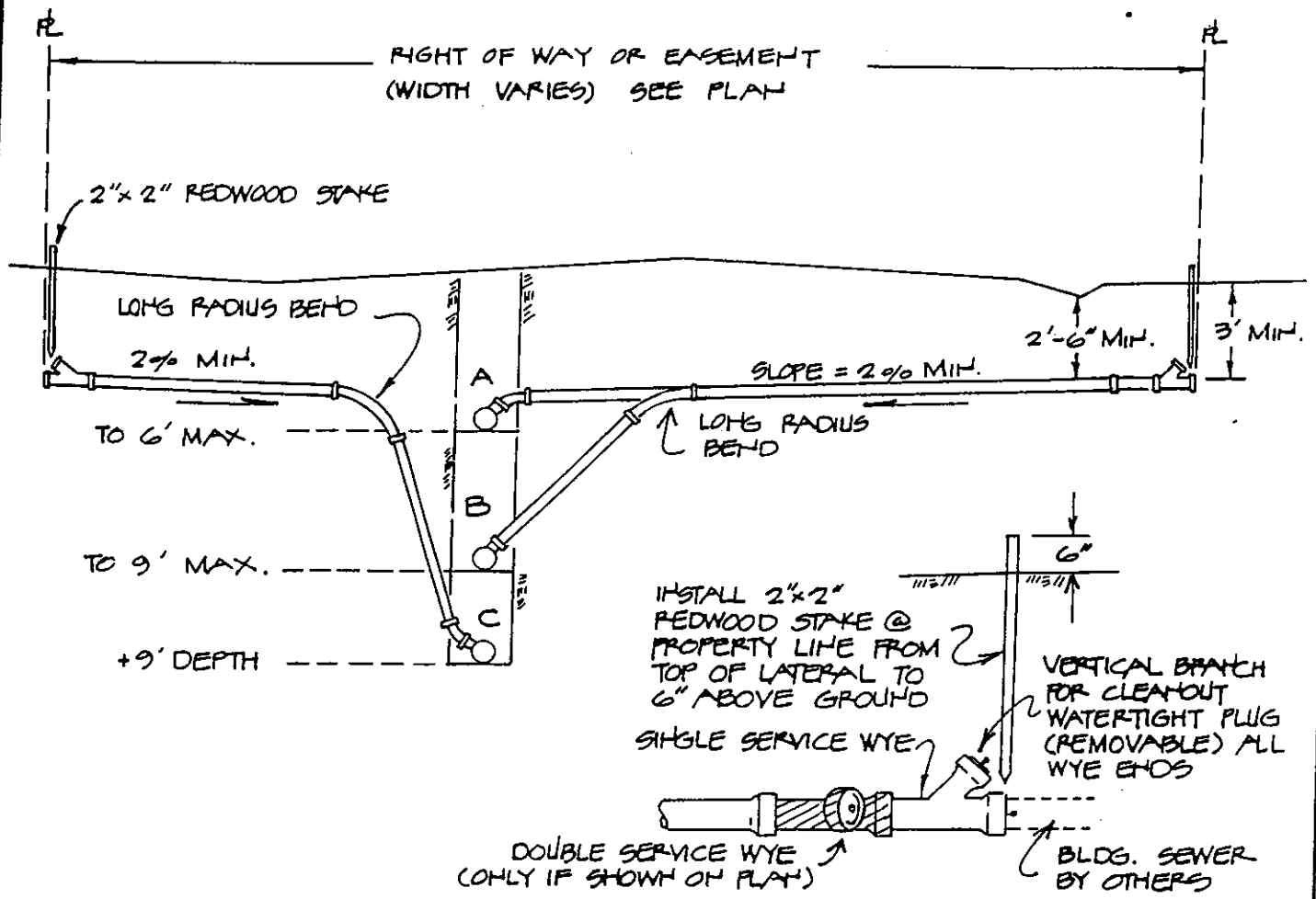

SERVICE ELEVATION

* PLACE CONCRETE 12" WIDE OR WELL COMPACTED BEDDING MATERIAL 18" WIDE UNDER WYE BRANCH AND FITTING, AND UNSUPPORTED PIPE. WHEN BEDDING MATERIAL IS USED, PLACE ADDITIONAL MATERIAL TO TOP OF BEND, THE FULL WIDTH OF THE TRENCH.

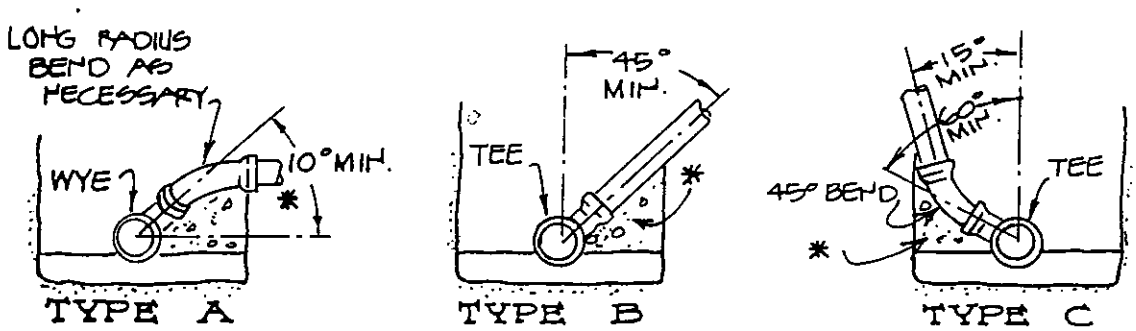

CONNECTION DETAILS

DEPARTMENT OF PUBLIC WORKS	CITY OF ANGELS SEWER SERVICE LATERALS N.T.S.	REV.	DATE	BY	SS-1
			2/24/81	R.T.W.	

NOTES: ① REINFORCED CONCRETE GRADE RINGS, CONES, PIPE RISERS OR APPROVED PRECAST MANHOLE SECTIONS SHALL CONFORM TO CURRENT A.S.T.M. SPEC. No. C-478.

② SELECT IMPORT MATERIAL, 100% PASSING 3/4" SIEVE & 50% MINIMUM SAND EQUIVALENT.

③ ENCASEMENT CONCRETE SHALL BE POURED AGAINST UNDISTURBED EARTH.

④ ALL INLETS AND OUTLETS FROM MANHOLE STRUCTURES SHALL HAVE A FLEXIBLE JOINT WITHIN 2 FEET OF THE STRUCTURE.

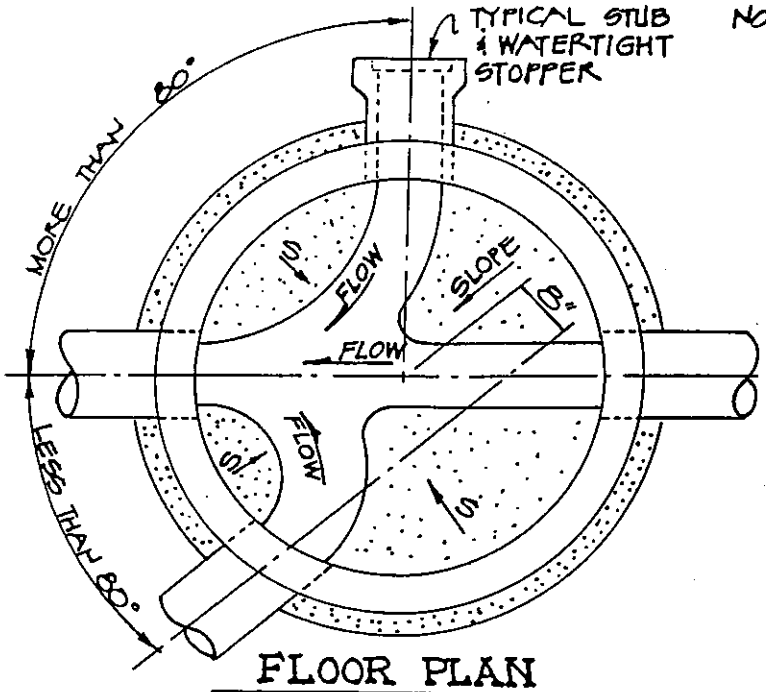

FLOOR PLAN

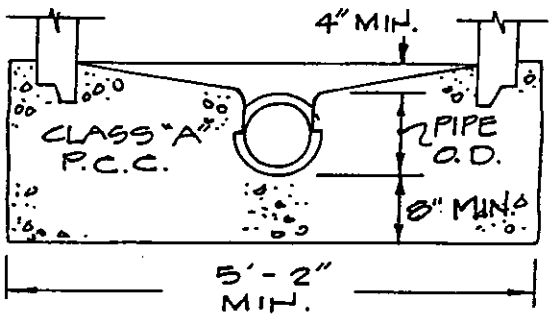

SECTION A-A

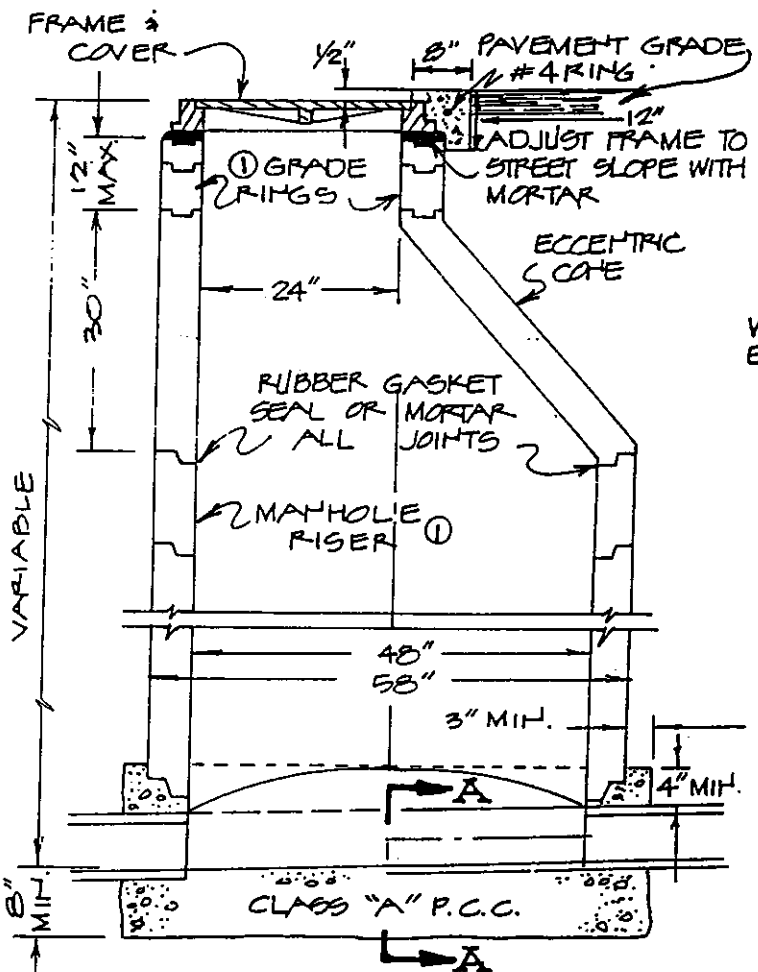

TYPICAL SECTION

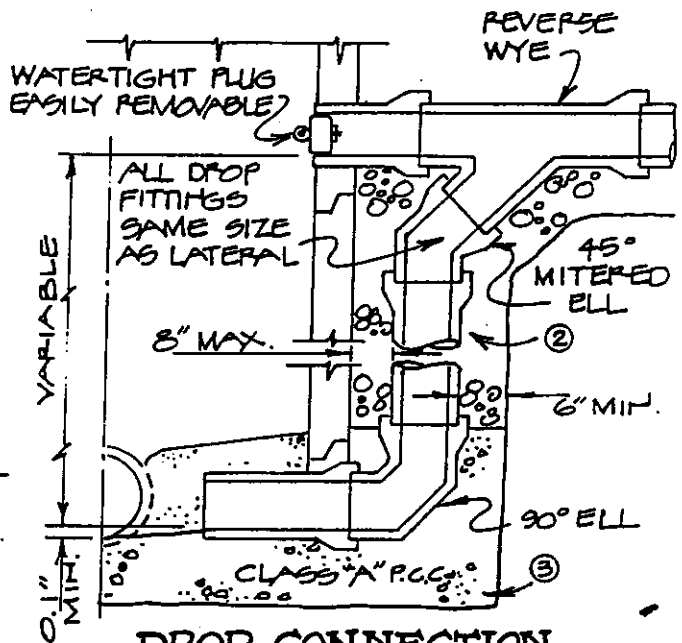

DROP CONNECTION

DEPARTMENT OF PUBLIC WORKS	CITY OF ANGELS STANDARD TYPE "A" MANHOLE N.T.S.	REV.	DATE	BY	SS-2
			2/24/81	R.T.W.	

NOTE : REINFORCED CONCRETE GRADE RINGS, CONES, PIPE RISERS OR APPROVED PRECAST MANHOLE SECTIONS SHALL CONFORM TO CURRENT A.S.T.M. SPEC. No. C-478

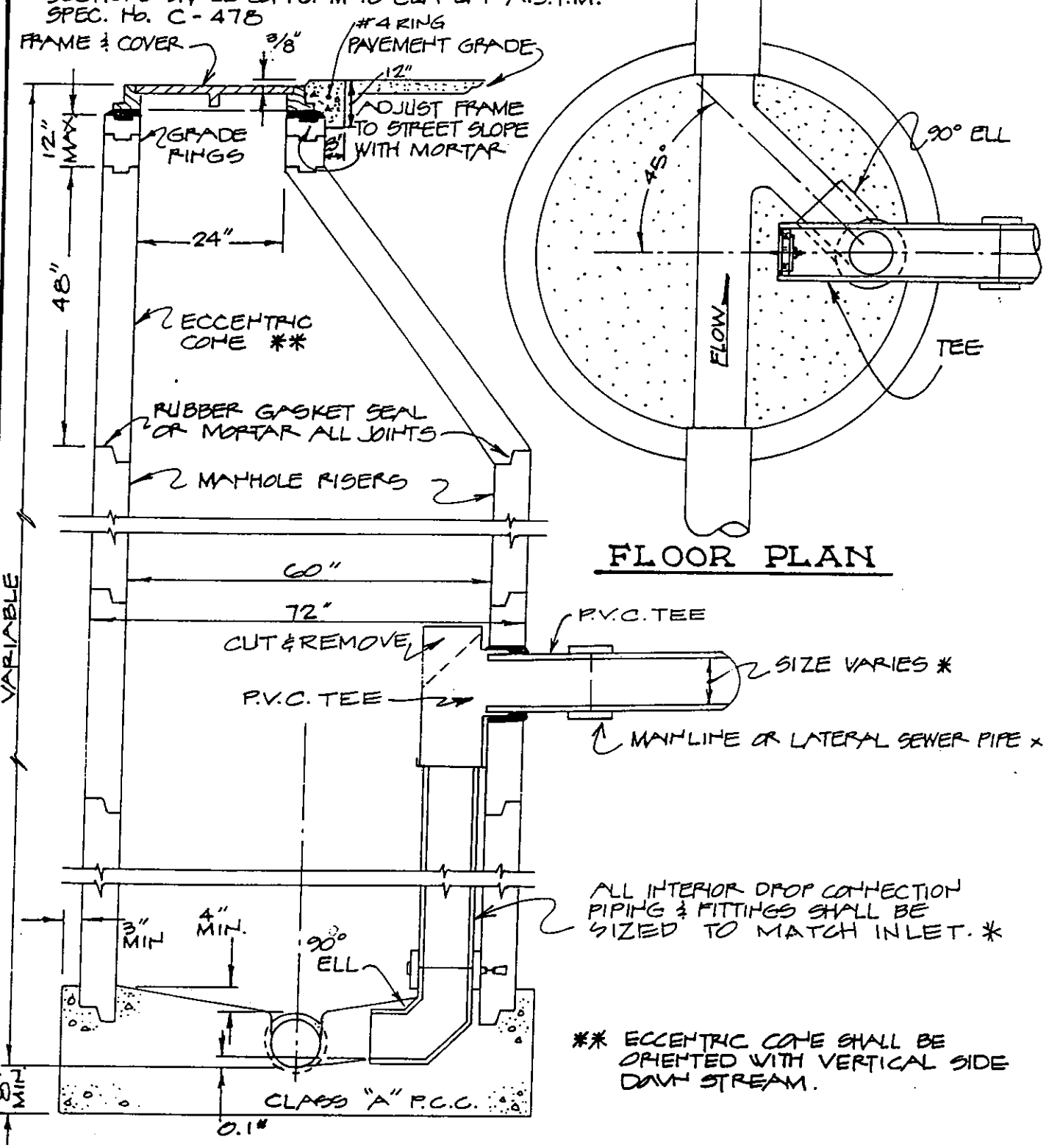

** ECCENTRIC CONE SHALL BE ORIENTED WITH VERTICAL SIDE DOWN STREAM.

DEPARTMENT OF PUBLIC WORKS	CITY OF ANGELS STANDARD TYPE "B" MANHOLE N. T. S.	REV.	DATE	BY	SS-3
			3/10/98	GG	
			2/24/81	R.T.W.	

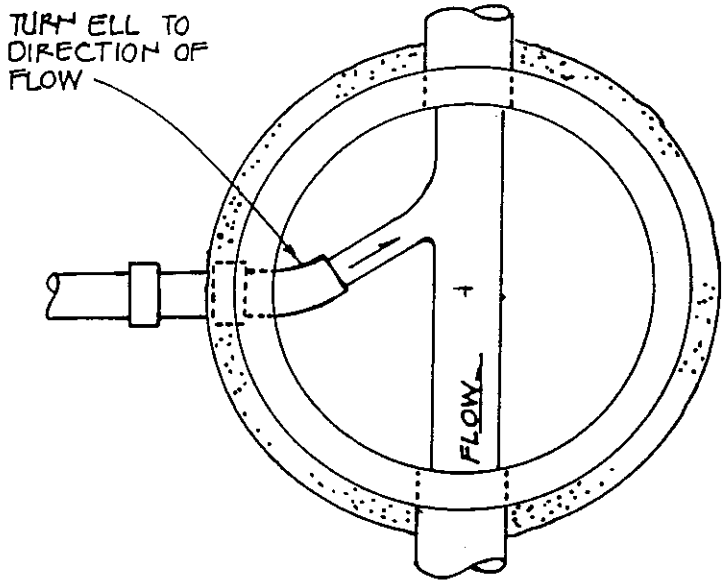

PLAN

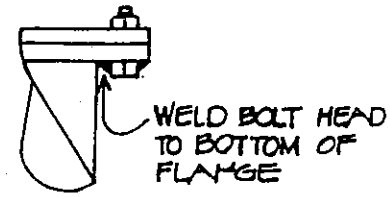

FLANGE DETAIL

PROVIDE SMOOTH TRANSITION BETWEEN INVERT OF INLET AND OUTLET OF PIPES.

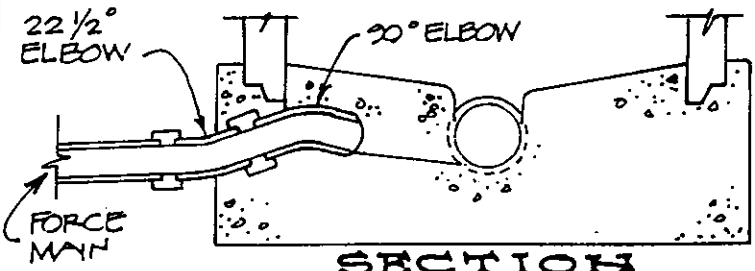

SECTION
OUTLET CONNECTION AT MANHOLE

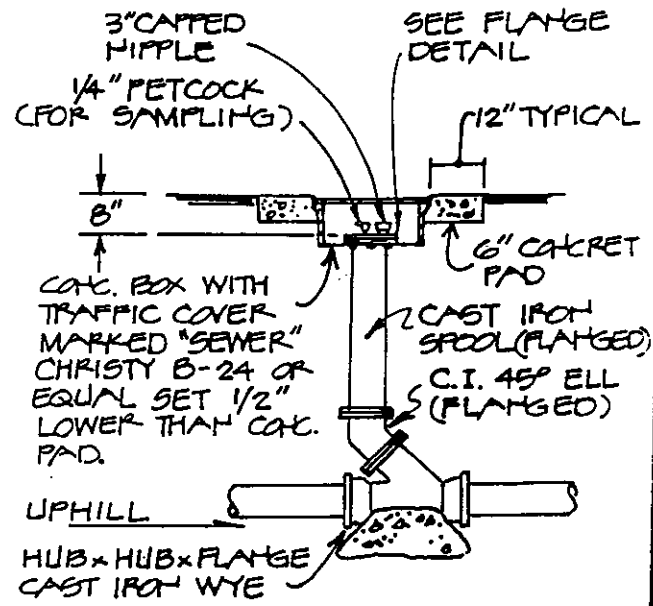

FLUSHING BRANCH ASSEMBLY

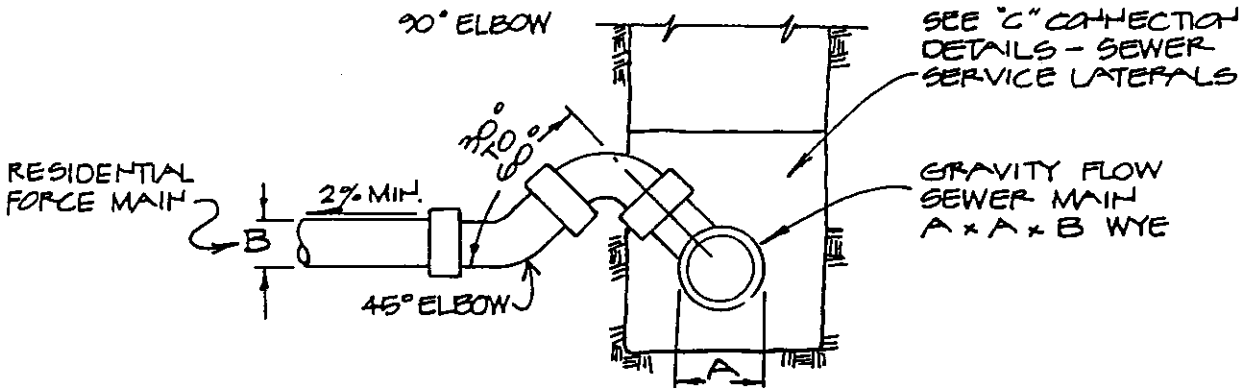

SERVICE LATERAL TO GRAVITY MAINLINE

DEPARTMENT OF PUBLIC WORKS	CITY OF ANGELS STANDARD FORCE MAIN DETAILS N. T. S.				SS-4
			2/24/81	R.T.W.	
		REV.	DATE	BY	

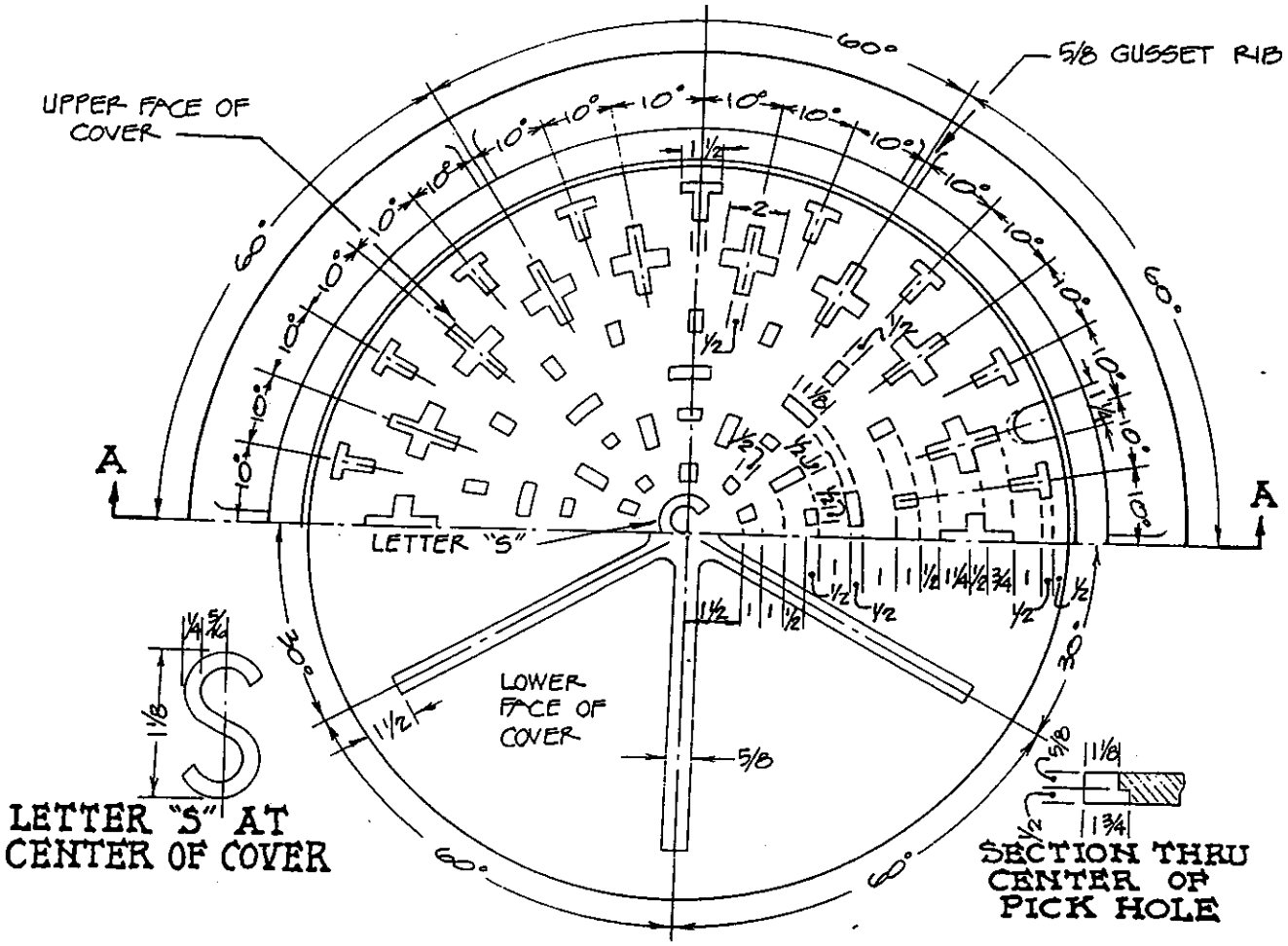

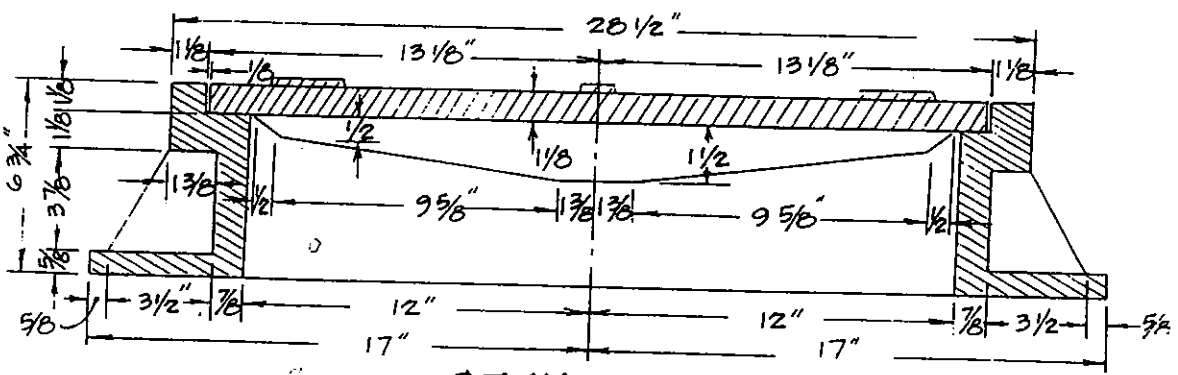

CALIFORNIA
CONCRETE
PIPE ASSY. A-201
FRAME - A-202
COVER - A-203
APPROX WT. - 385#

DEPARTMENT OF PUBLIC WORKS	CITY OF ANGELS STANDARD MANHOLE COVER N.T.S.				SS-5
			3/10/98	GG	
			2/24/81	R.T.W.	
		REV.	DATE	BY	

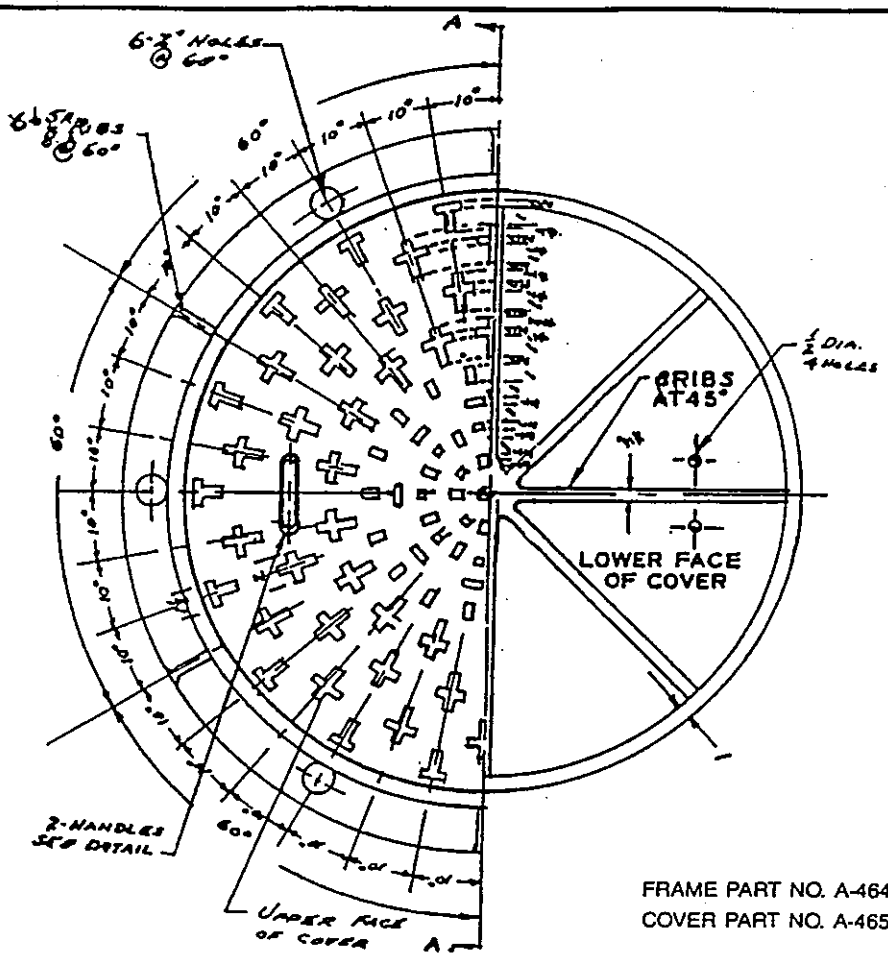

LETTER "S" AT CENTER OF COVER

FRAME PART NO. A-464 APPROX. WT. 300 LBS.
COVER PART NO. A-465 APPROX. WT. 402 LBS.

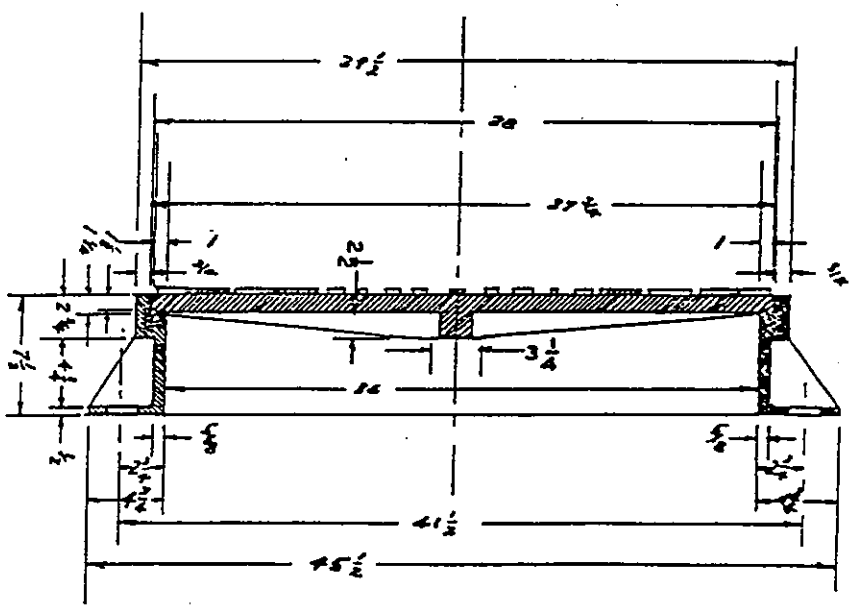

MANHOLE ASSY- 36" & PRESSURE TYPE
BOLT DOWN APPLICATIONS
CALIFORNIA CONCRETE PIPE A-463 ASSY.

MATERIAL CAST IRON	APPROX. WT. 702 LBS.

DEPARTMENT OF PUBLIC WORKS	CITY OF ANGELS STANDARD BOLT DOWN MANHOLE COVER N.T.S.	REV.	DATE	BY	SS-6
			3/10/98	GG	
			2/24/81	R.T.W.	

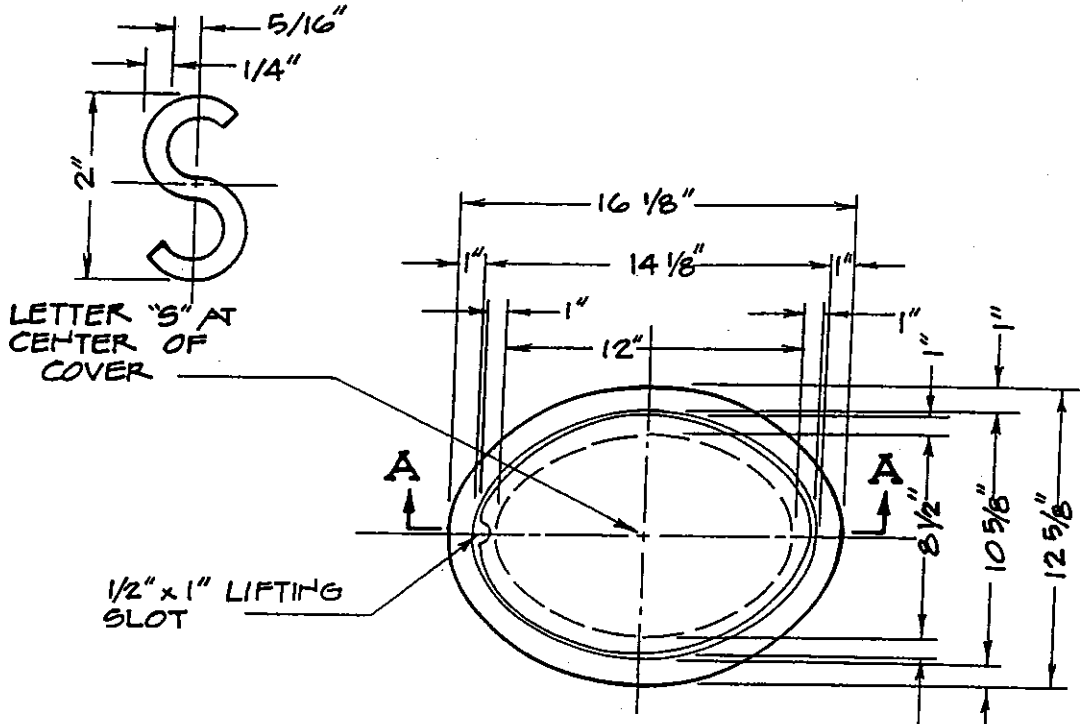

PLAN OF COVER

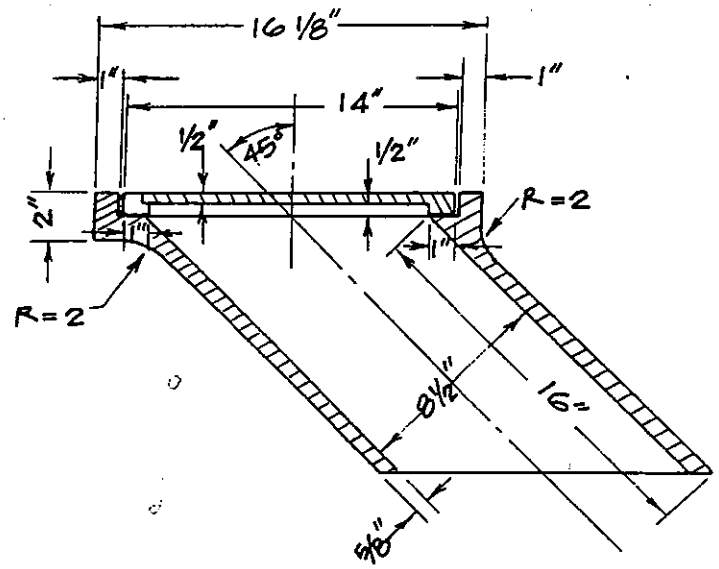

SECTION A-A

CALIFORNIA CONCRETE PIPE
A-490 ASSY.

DEPARTMENT OF PUBLIC WORKS	CITY OF ANGELS STANDARD CLEANOUT N. T. S.				SS-7
			3/10/98	GG	
			2/24/81	R.T.W.	
		REV.	DATE	BY	

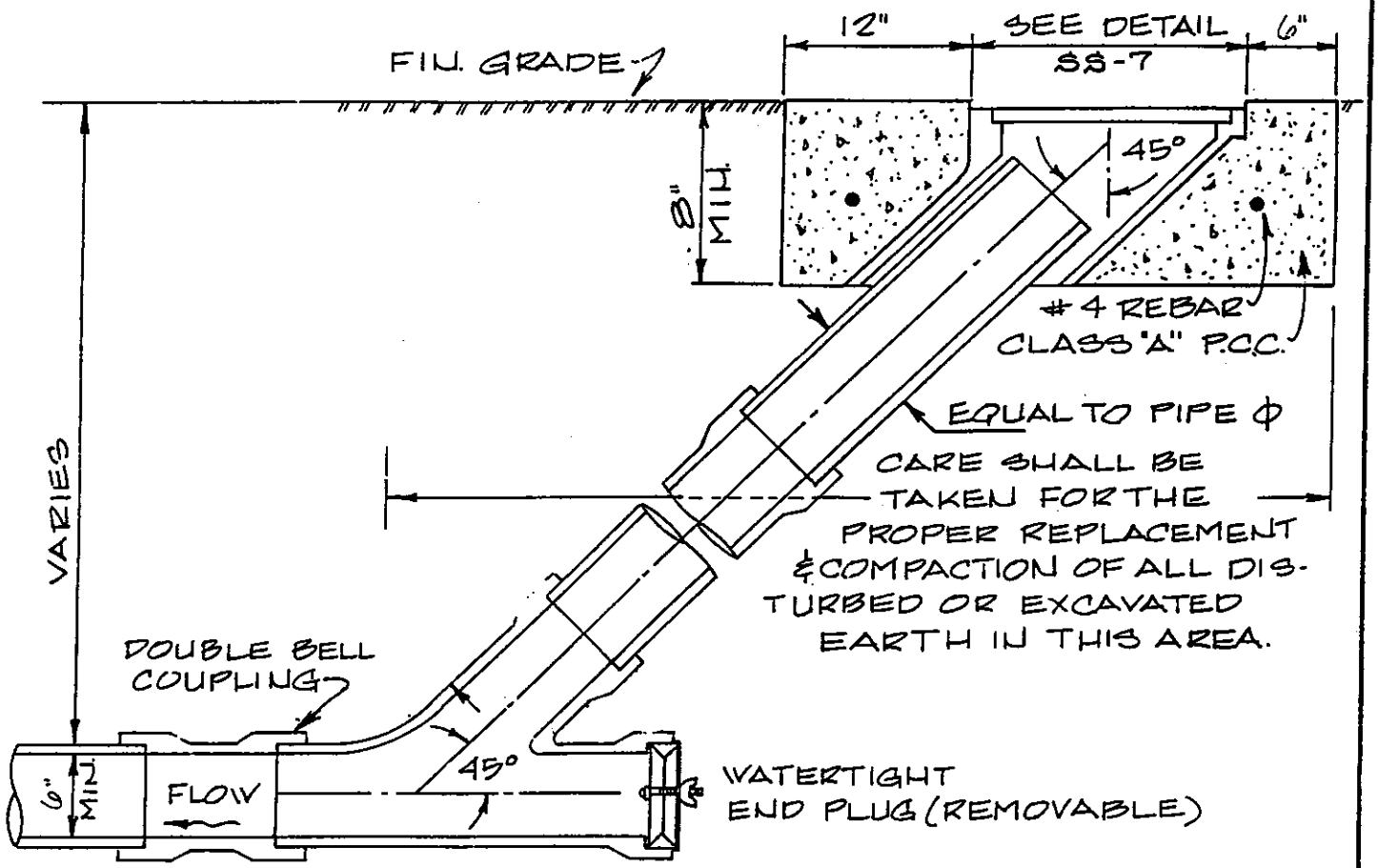

SCALE: NONE

DEPARTMENT OF PUBLIC WORKS	CITY OF ANGELS STANDARD FLUSHER BRANCH & CLEANOUT ASSEMBLY				SS-8
			3/10/98	GG	
		REV.	DATE	BY	

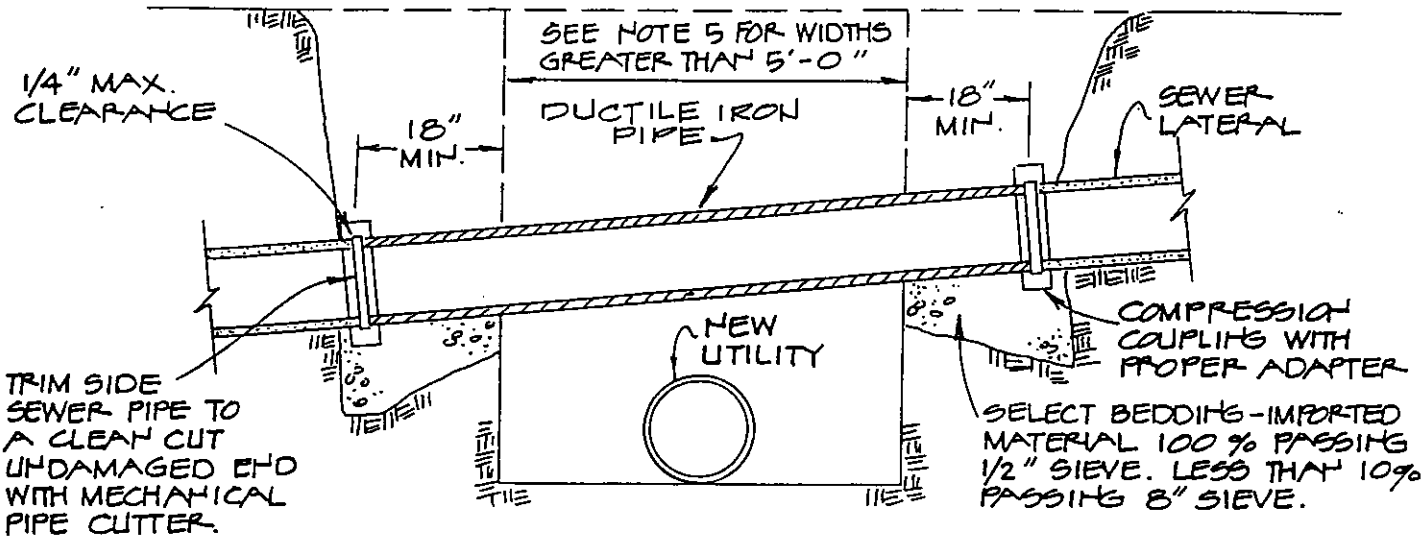

NOTES

1. INSIDE DIAMETER OF DUCTILE IRON PIPE TO BE THE SAME AS THE PIPE TO WHICH IT CONNECTS.
2. DUCTILE IRON PIPE IS TO BE USED AS PER THIS DETAIL WHENEVER THE SEWER LATERAL IS CUT OR DAMAGED.
3. DUCTILE IRON PIPE IS TO BE USED AS PER THIS DETAIL WHENEVER CONSTRUCTION PASSES BENEATH THE SEWER LATERAL.
4. ALTERATION OF SEWER GRADES WILL BE PERMITTED ONLY AFTER WRITTEN PERMISSION HAS BEEN RECEIVED FROM ENGINEER.
5. WHENEVER THE SPAN, WHETHER CAUSED BY TRENCH WIDTH OR CROSSING ANGLE OF DUCTILE IRON PIPE EXCEED 5'-0", PLACE SELECT BEDDING TO 6" ABOVE THE CAST IRON PIPE AND 18" EACH SIDE OF ITS CENTER LINE.
6. PIPE CLASSES
   4" CLASS 51 D.I.P.
   6" AND LARGER CLASS 50 D.I.P.

DEPARTMENT OF PUBLIC WORKS	CITY OF ANGELS STANDARD UTILITY CROSSING N. T. S.				SS-9
			2/24/81	R.T.W.	
		REV.	DATE	BY	

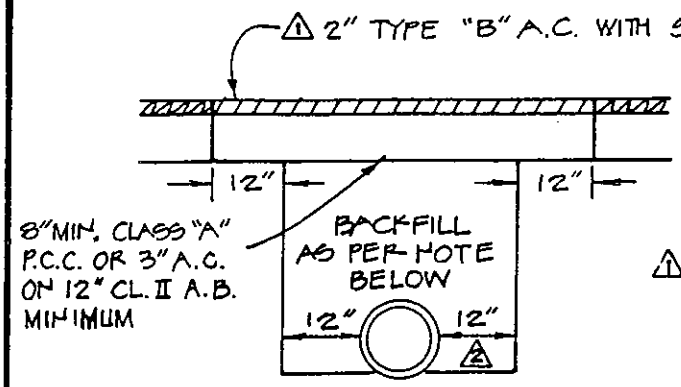

TYPE "A"

ASPHALT CONCRETE STREETS

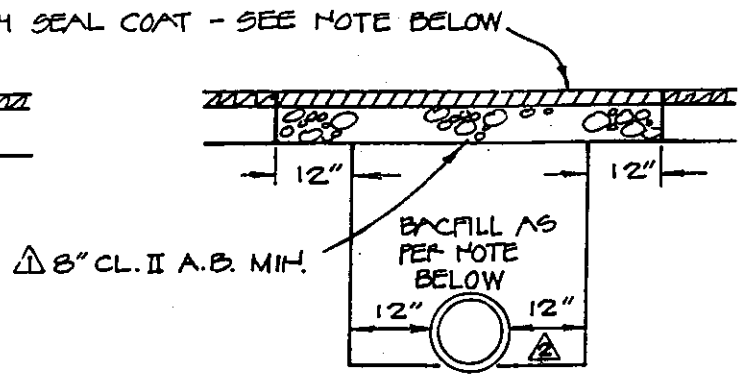

TYPE "B"

ARMOR COAT OR SEAL COAT STREETS

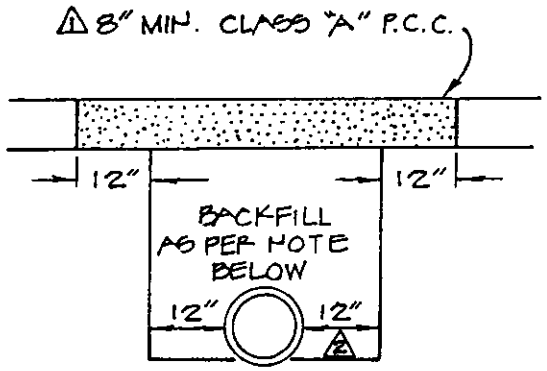

TYPE "C"

PORTLAND CEMENT CONCRETE STREET

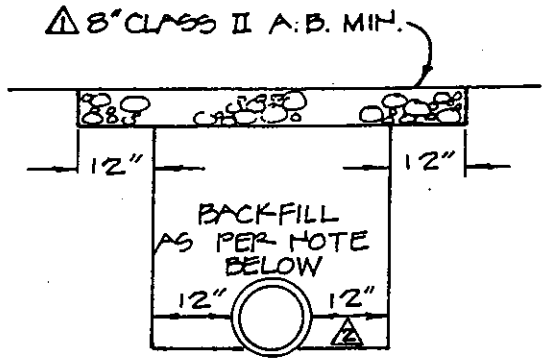

TYPE "D"

UNIMPROVED STREETS, ALLEYS OR EASEMENTS

NOTES:

ALL WORK SHOWN ABOVE SHALL CONFORM TO THE APPLICABLE SECTION OF THE STANDARD SPECIFICATIONS.

ALL EXCAVATION WITHIN PUBLIC RIGHT OF WAY SHALL BE BACKFILLED IN ACCORDANCE WITH SECTION 19-3 OF THE STANDARD SPECIFICATIONS.

AREA ADJACENT TO THE TRENCH SHALL BE LEFT IN A CONDITION EQUAL TO OR BETTER THAN THAT OF EXISTING PRIOR TO CONSTRUCTION.

SEAL COAT - BITUMINOUS BINDER SHALL BE COVERED WITH EITHER SAND OR SCREENINGS TO MATCH EXISTING SURFACE.

△1 STRUCTURAL SECTION ELEMENTS MAY BE INCREASED WHERE REQUIRED BY THE CITY ENGINEER DUE TO SOIL CONDITIONS AND TRAFFIC CONSIDERATIONS. THE REPLACEMENT STRUCTURAL SHALL EQUAL THE EXISTING STRUCTURAL SECTION AS A MINIMUM REQUIREMENT, EXCEPT THAT THE SECTION SHOWN ABOVE IS AN ABSOLUTE MINIMUM.

△2 MAXIMUM TRENCH WIDTH TO BE 24 INCHES PLUS OUTSIDE DIAMETER OF PIPE TO A HEIGHT OF 24 INCHES ABOVE THE TOP OF PIPE, NO EXCEPTIONS.

DEPARTMENT OF PUBLIC WORKS	CITY OF ANGELS STANDARD PAVEMENT REPLACEMENT & BACKFILL DETAILS SCALE: 3/8" = 1'-0"				SS-10
			2/24/81	R.T.W.	
		REV.	DATE	BY	

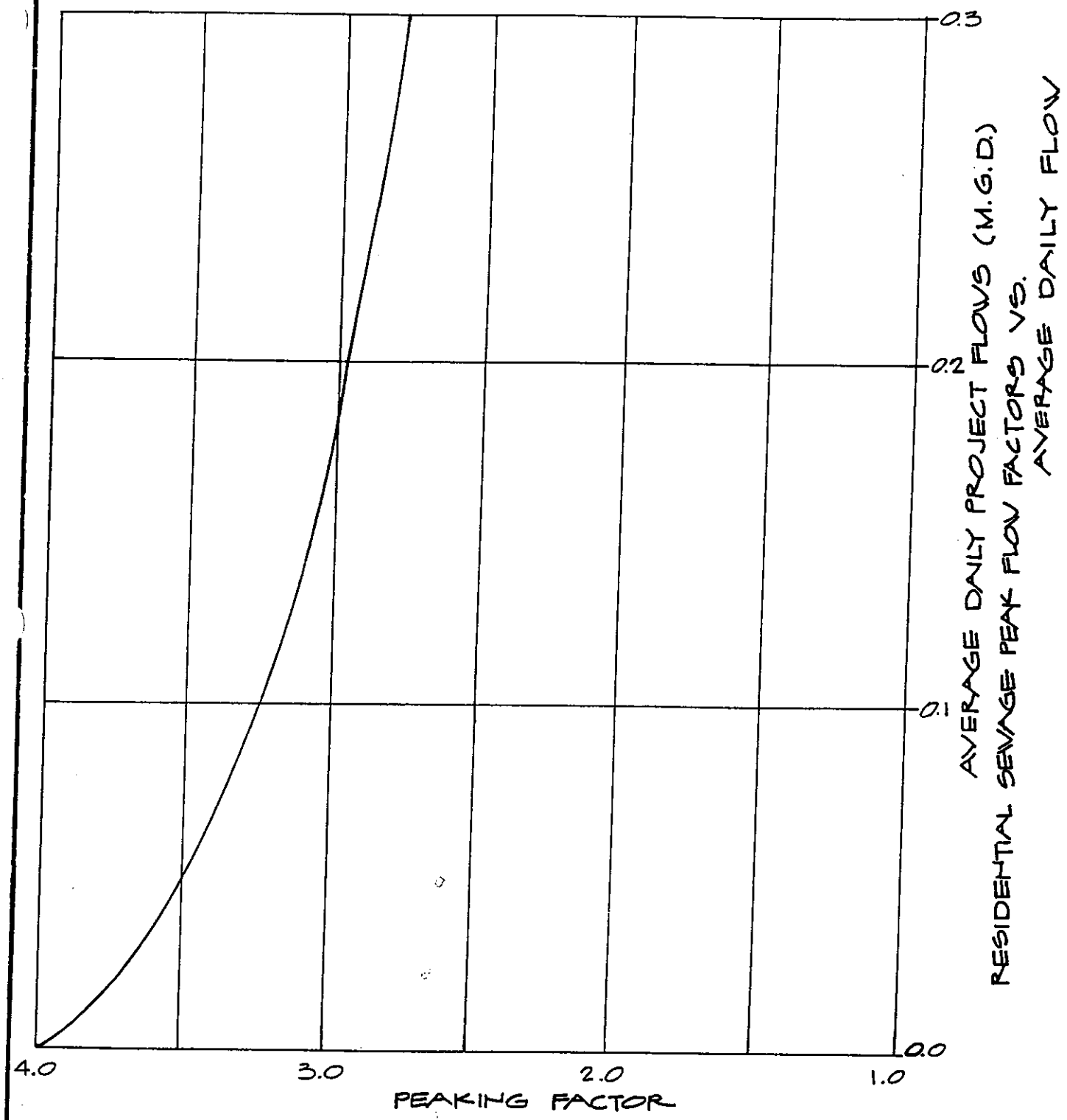

DEPARTMENT OF PUBLIC WORKS	CITY OF ANGELS PEAK FLOW FACTORS	REV.	DATE	BY	SS-11
				R.T.W.	

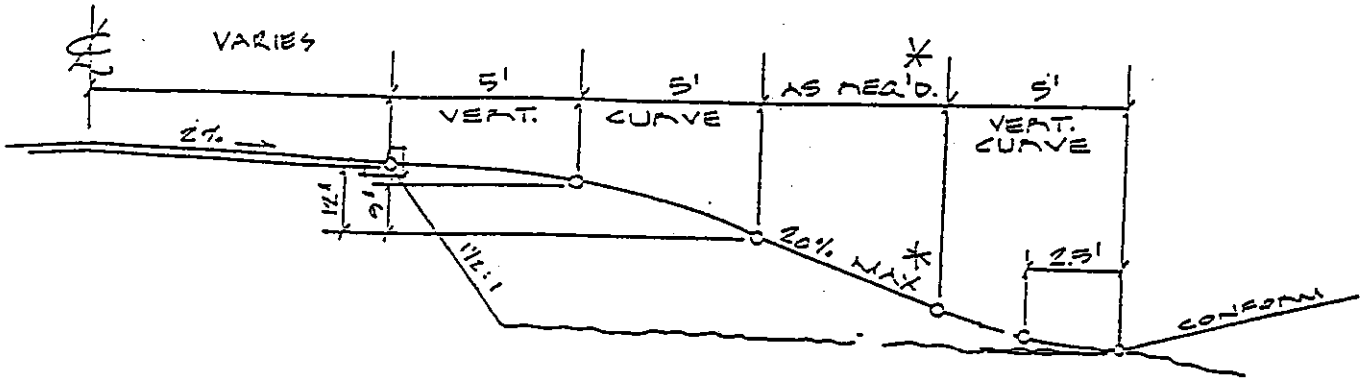

SECTION "A-A"
@ FILL SLOPE

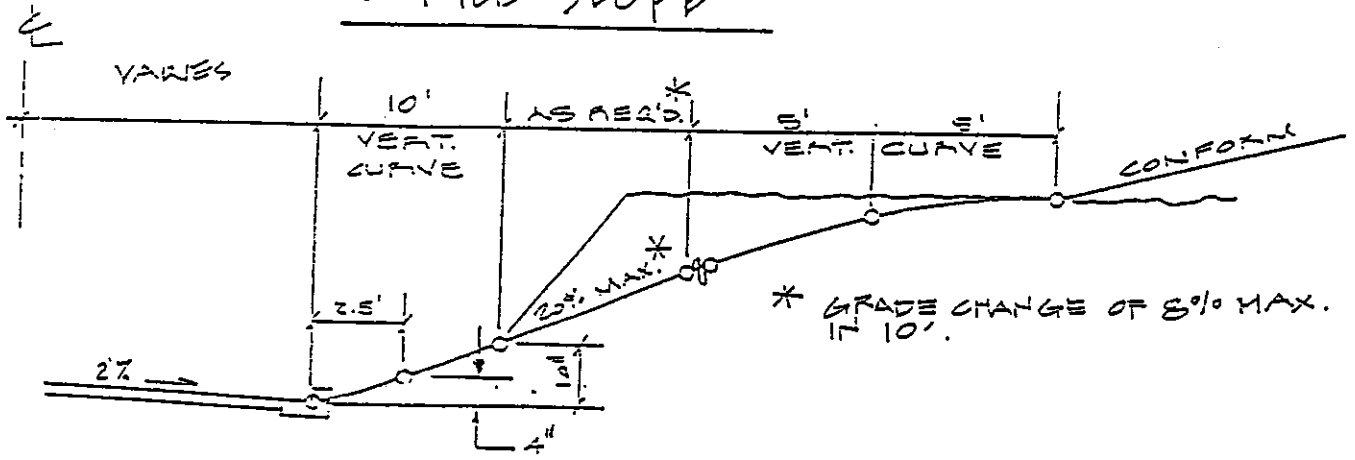

* GRADE CHANGE OF 8% MAX. IN 10'.

SECTION "A-A"
@ CUT BANK

DEPARTMENT OF PUBLIC WORKS	CITY OF ANGELS RESIDENTIAL DRIVEWAY VERTICAL ALIGNMENT N.T.S.	REV.	DATE	BY	SW-6

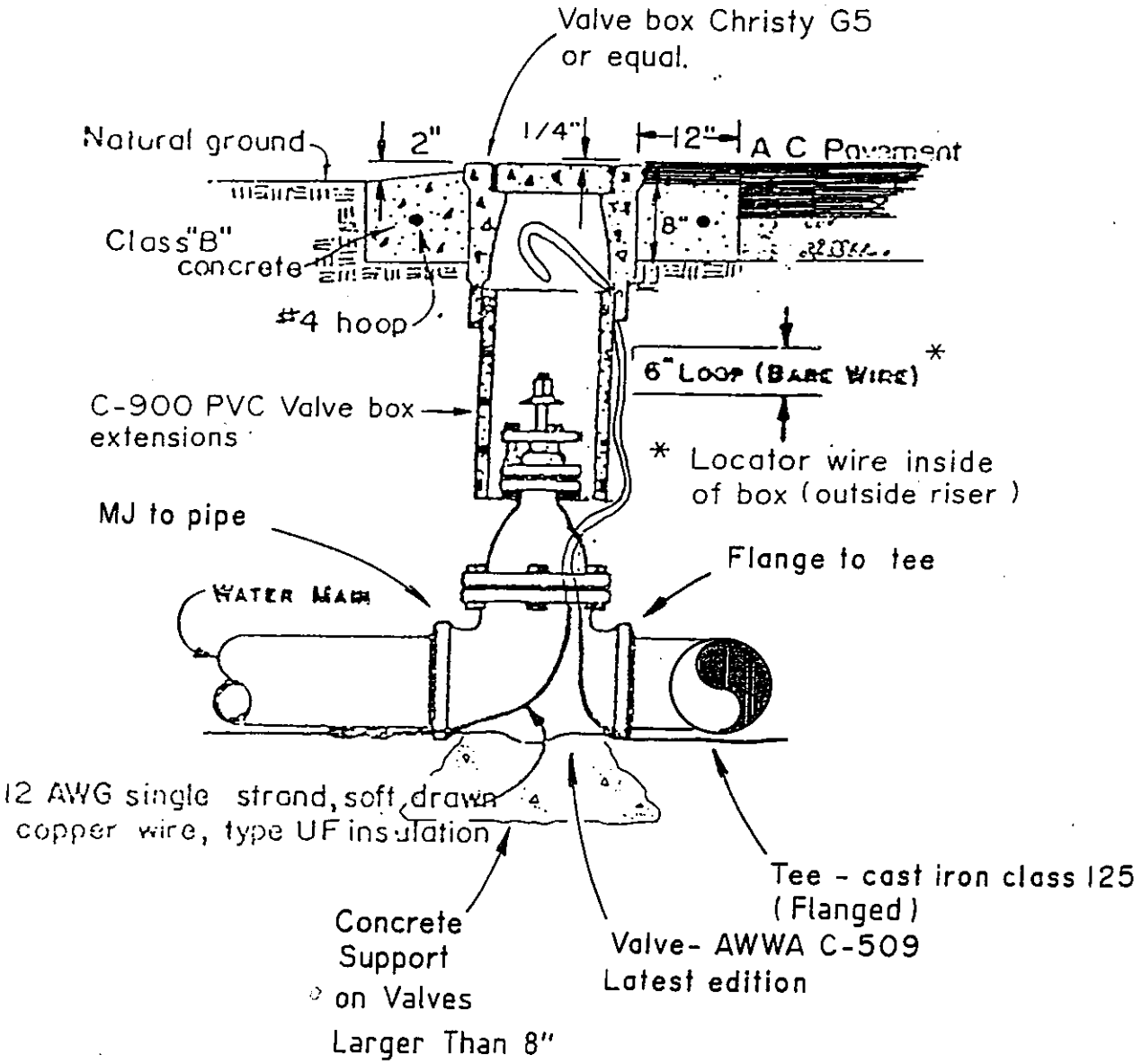

DEPARTMENT OF PUBLIC WORKS	CITY OF ANGELS VALVE & BOX DETAIL				WS-1
		2	3-10-98	GG	
		1	3-15-97	JP	
		REV.	DATE	BY	

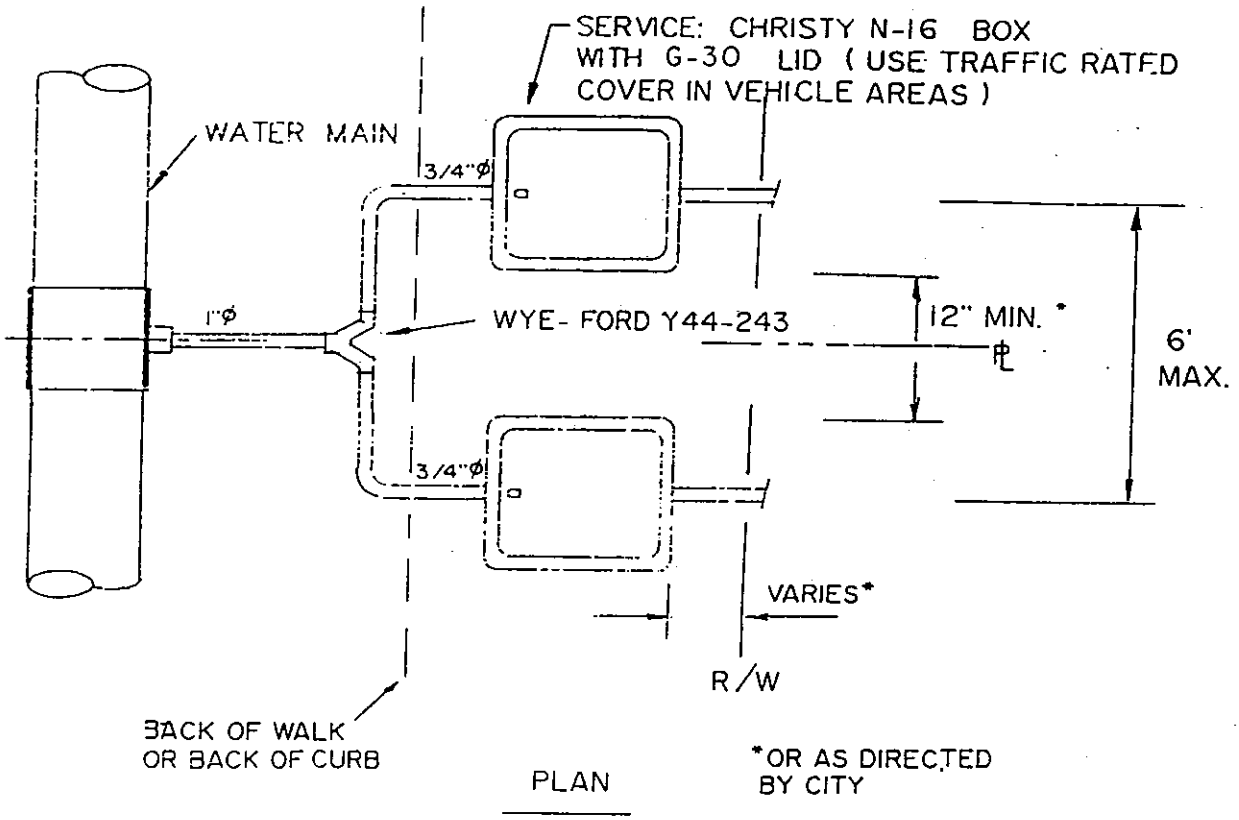

PLAN

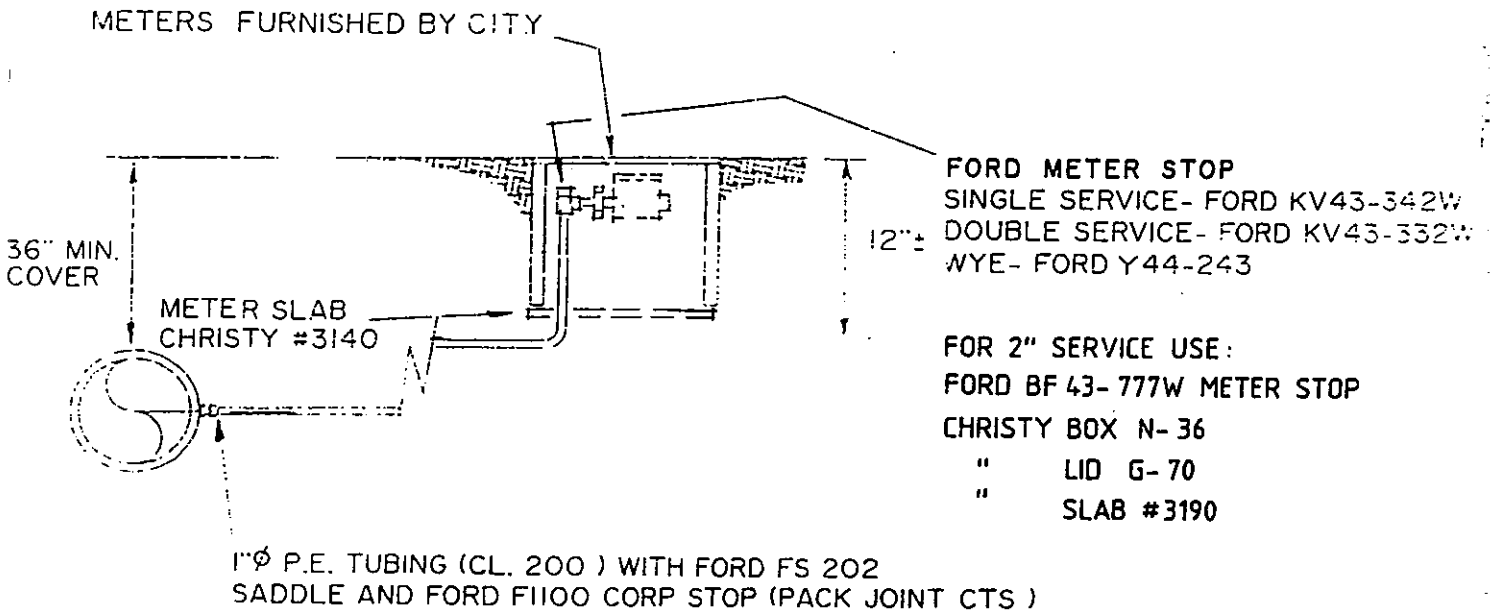

SECTION

DEPARTMENT OF PUBLIC WORKS	CITY OF ANGELS SERVICE CONNECTION DETAIL					WS-2
		2	3-10-98	GG		
		1	3-15-97	JP		
		REV.	DATE	BY		

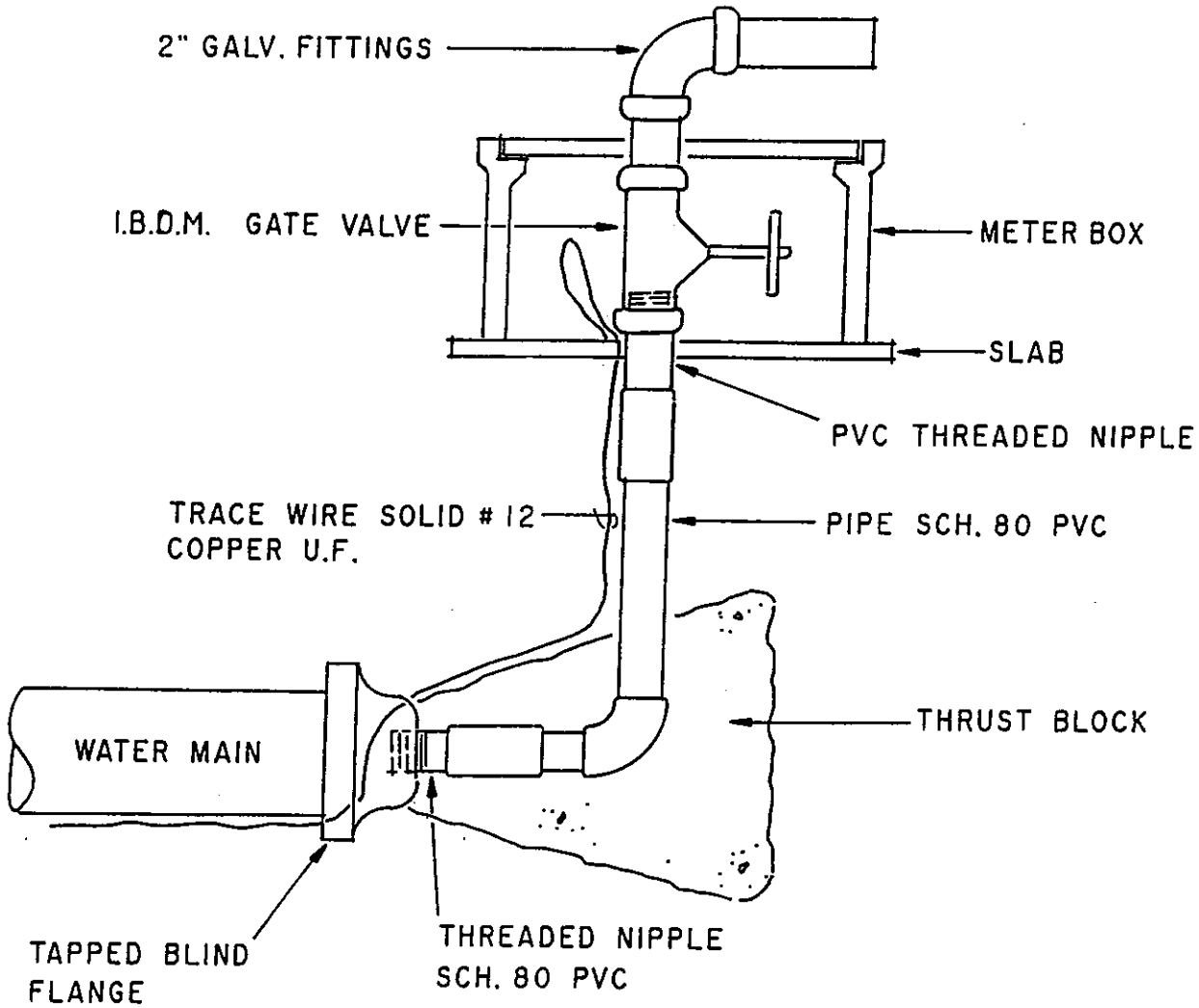

DEPARTMENT OF PUBLIC WORKS	CITY OF ANGELS 2" BLOW OFF VALVE				WS-3
		1	3-10-98	GG	
		REV.	DATE	BY	

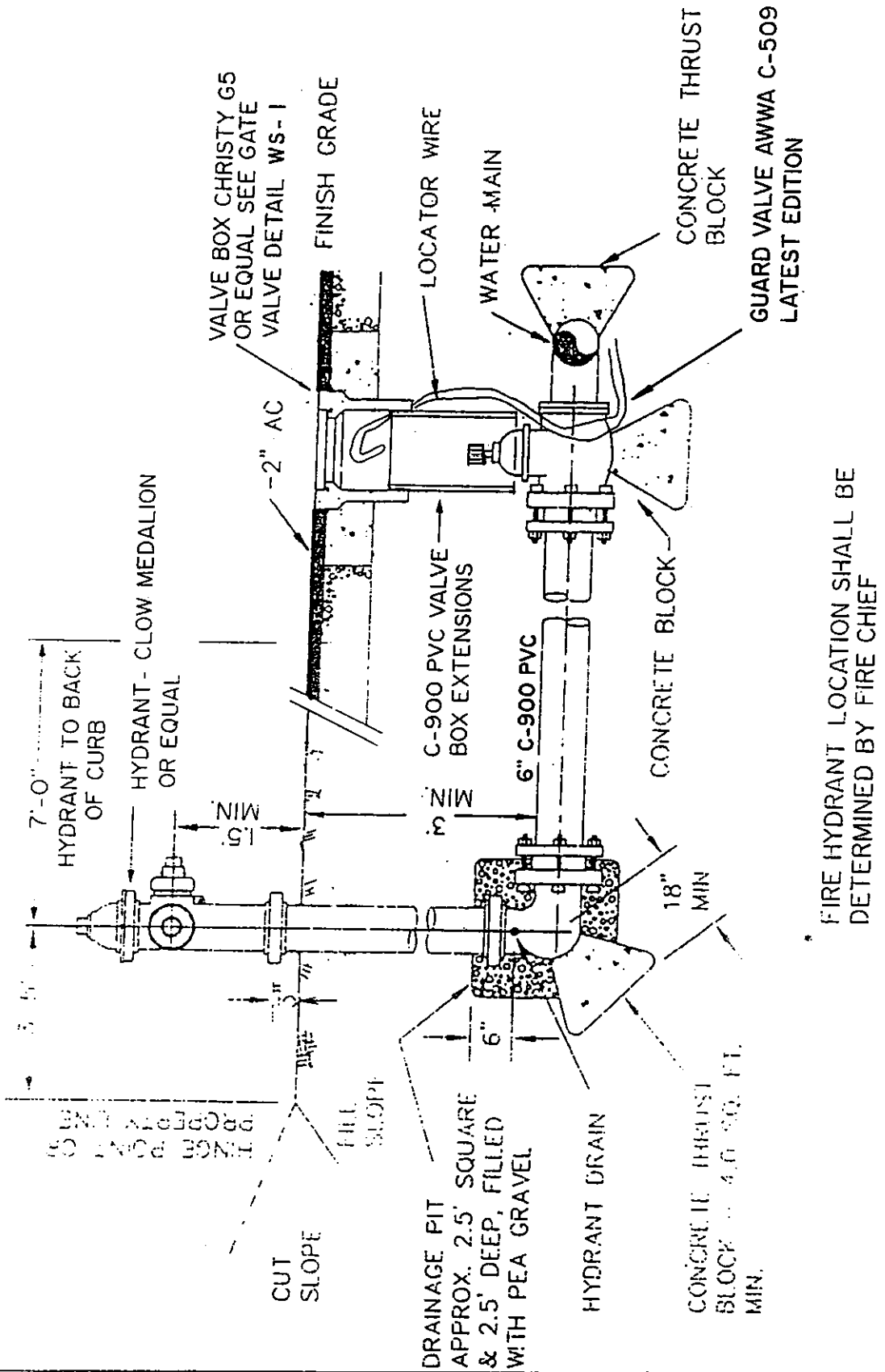

DEPARTMENT OF PUBLIC WORKS	CITY OF ANGELS FIRE HYDRANT ASSEMBLY	2	3-15-97	JP	WS-4
		1	1-91	[illegible]	
		REV.	DATE	BY	

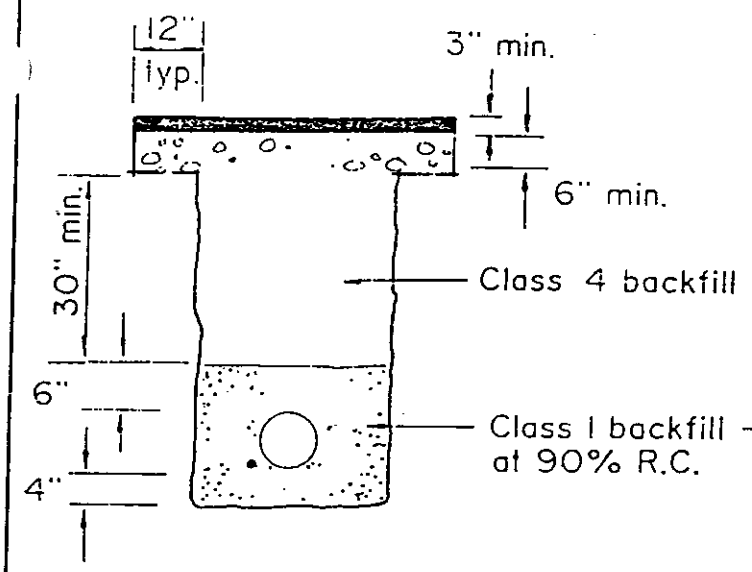

TYPE "A"

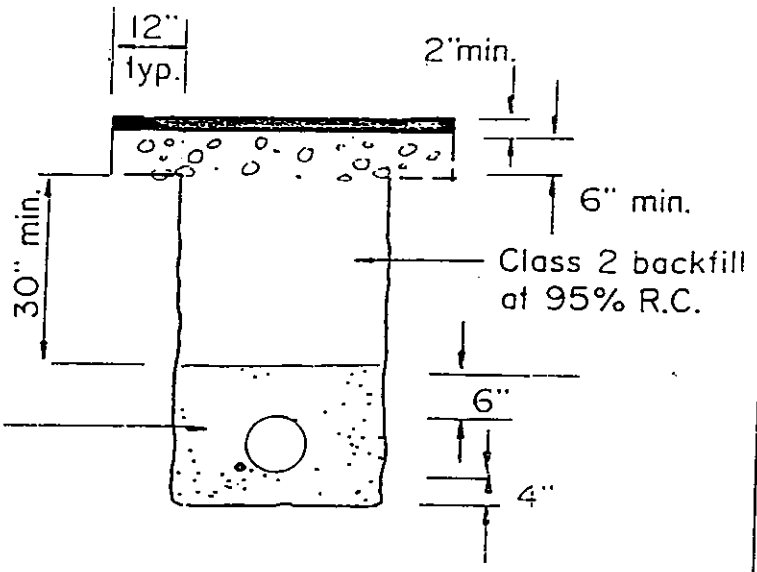

TYPE "B"

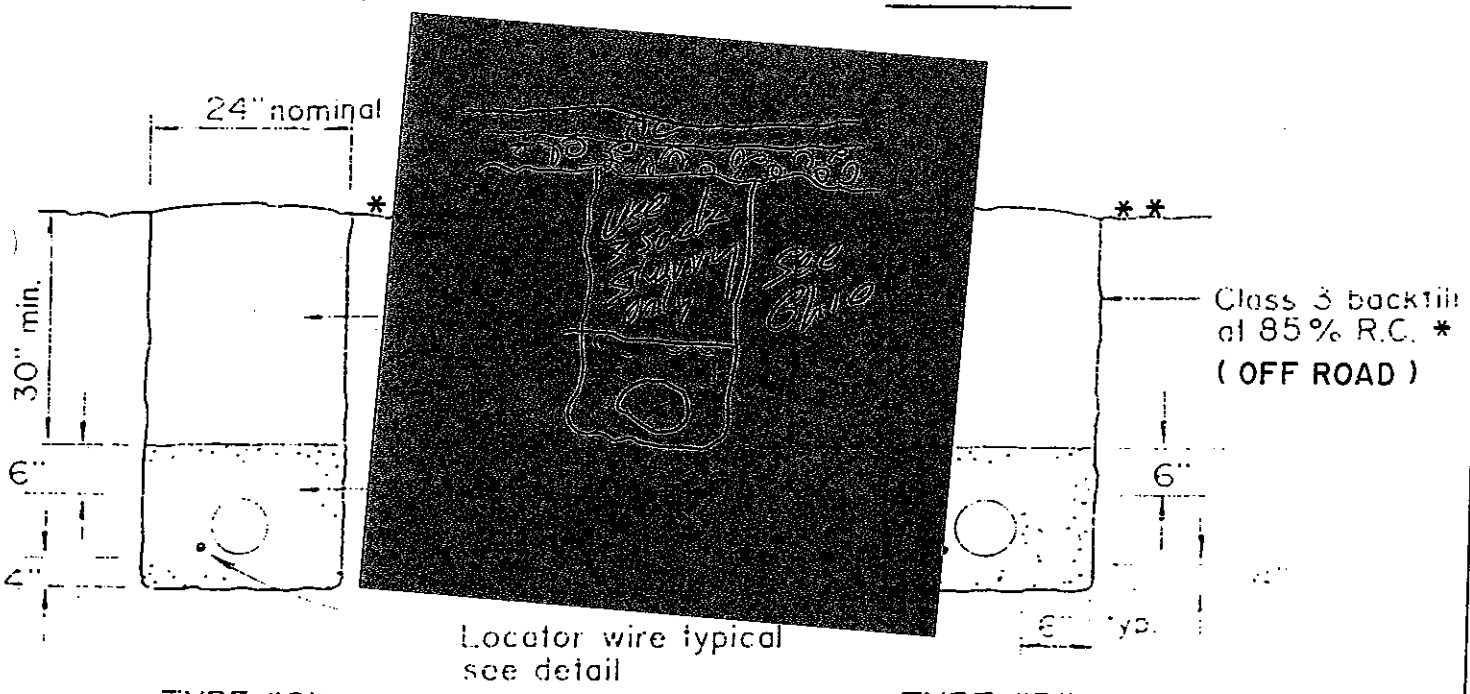

TYPE "C"

TYPE "D"

* 90% R.C. in roadway that is part of subdivision improvement.

** Clean- up and grade to existing ground line, mound to allow for settlement. For slopes over 15% special erosion control shall be used.

*** Min. depths for sewer projects specific.

DEPARTMENT OF PUBLIC WORKS	CITY OF ANGELS TRENCH DETAILS WATER AND SEWER		3-15-97	RTW	WS-5
			12-1-95	RTW	
		***	6-91	RTW	
		REV.	DATE	BY	

NOTE: PRESSURE REDUCING VALVES SHALL BE MFG. BY CLA-VAL

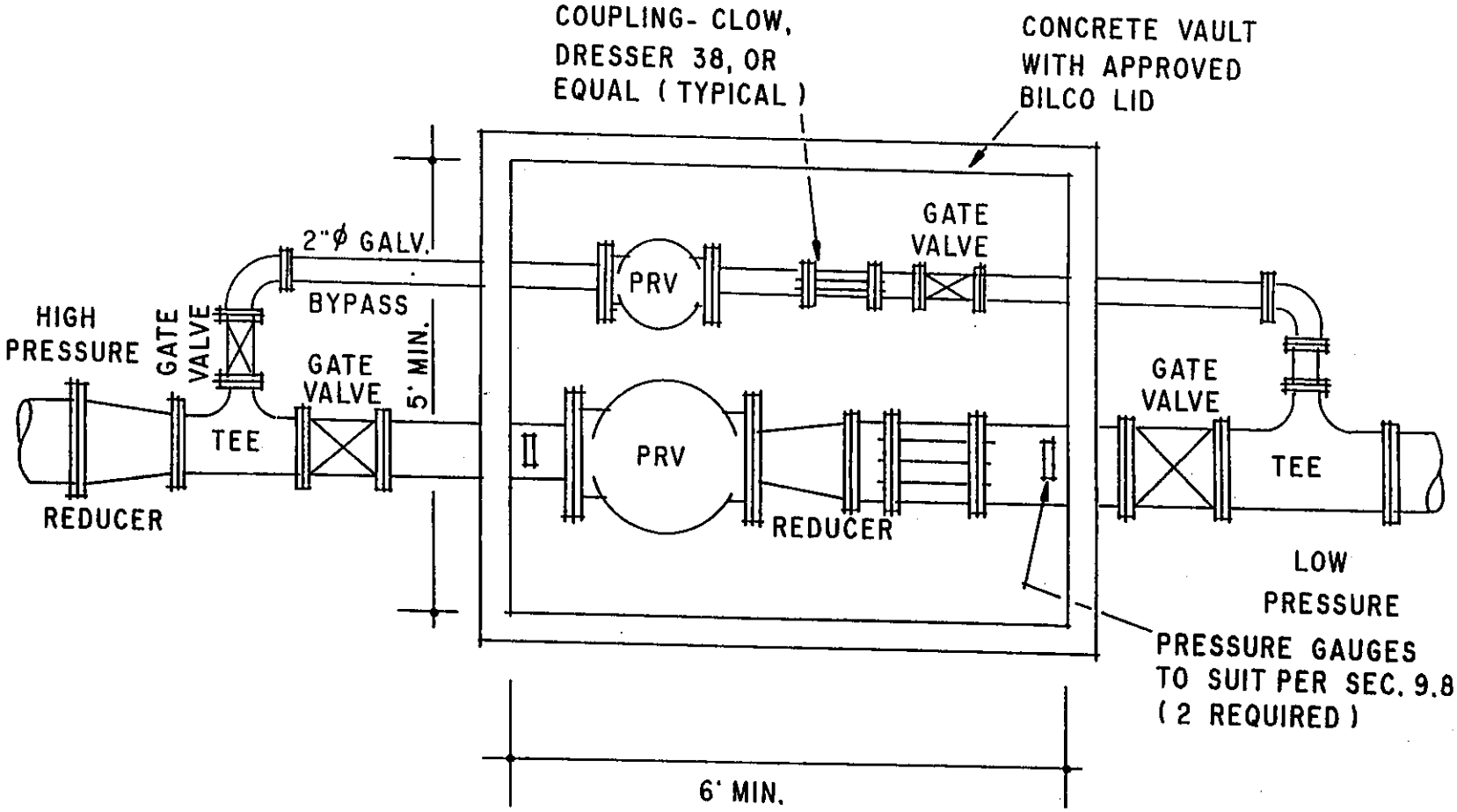

NOTES: 1. VALVE SUPPORTS SHALL BE PLACED AS DIRECTED.

2. PLACE 1' DEPTH OF DRAIN ROCK IN BOTTOM OF VAULT. CONSTRUCT FOOTING AS DIRECTED BY ENGINEER.

3. PRECAST CONCRETE VAULT TO BE APPROVED BY CITY ENGINEER.

DEPARTMENT OF PUBLIC WORKS

CITY OF ANGELS

PRESSURE REDUCING STATION

REV.	DATE	BY
	6-9-11	RTW
	3-15-97	RTW
	3-10-98	GG

WS-6

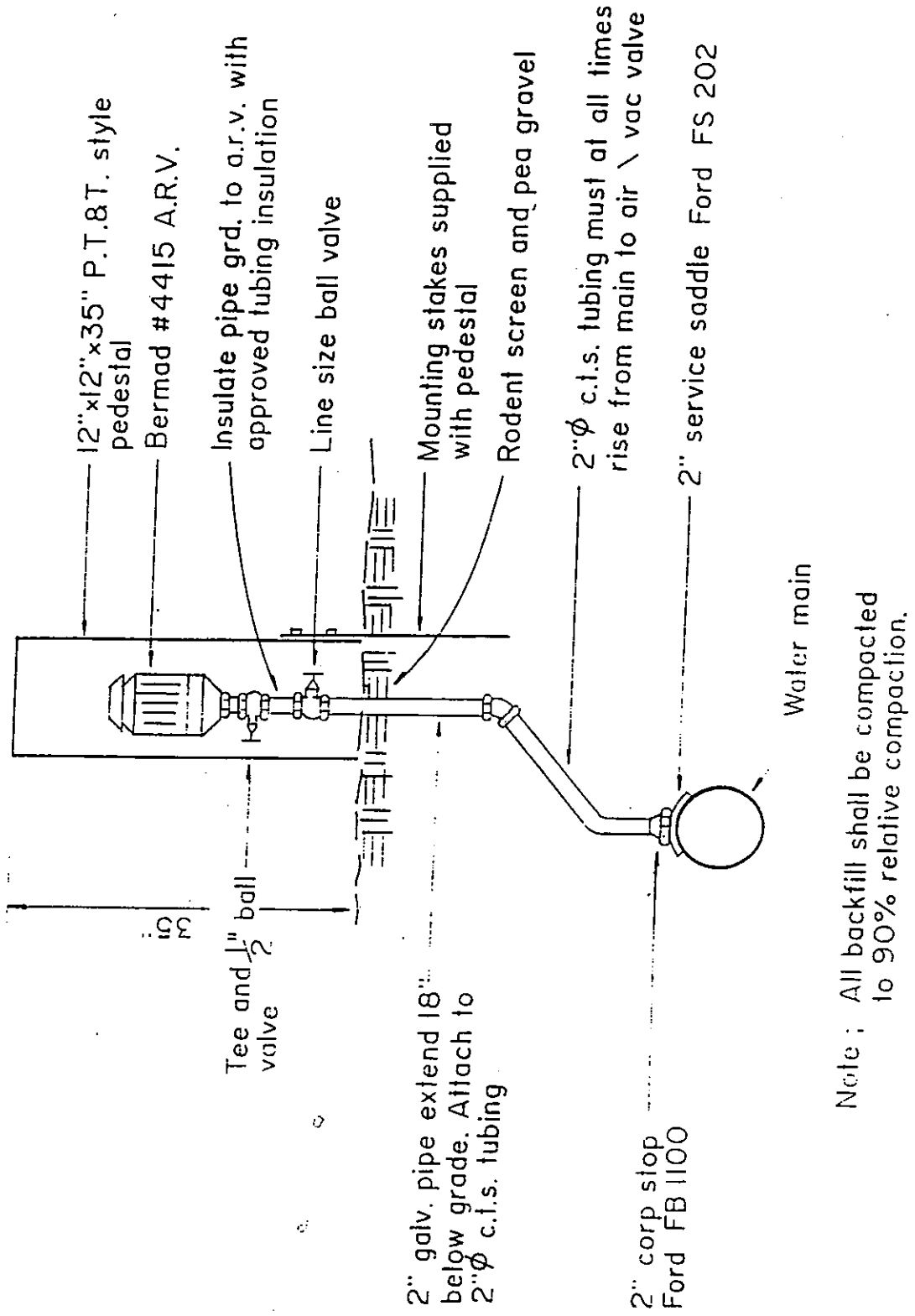

Note : All backfill shall be compacted to 90% relative compaction.

DEPARTMENT OF PUBLIC WORKS	CITY OF ANGELS **AIR\VAC VALVE**				WS-7
			6-91	RTW	
		REV.	DATE	BY	

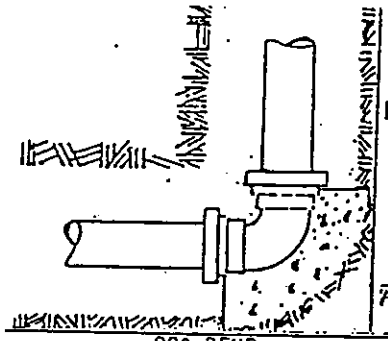

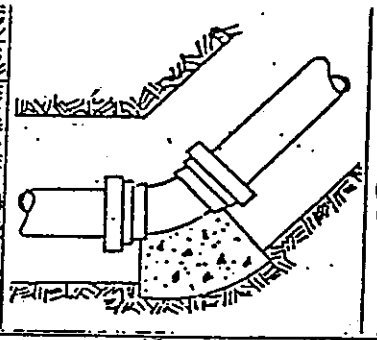

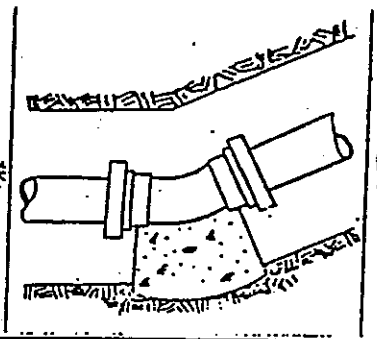

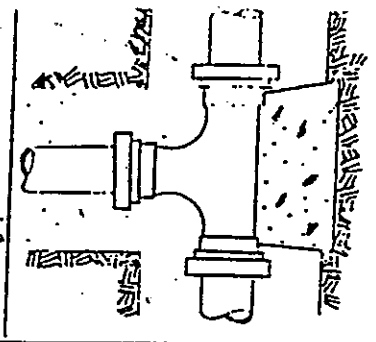

90° BEND		45° BEND		11/° OR 22/° BEND		TEE OR DEAD END	
4"	2 s.f.	4"	1 s.f.	4"	1 s.f.	4"	2 s.f.
6"	4	6"	3	6"	2	6"	3
8"	7	8"	4	8"	2	8"	5
10"	12	10"	6	10"	3	10"	8
12"	16	12"	9	12"	5	12"	12

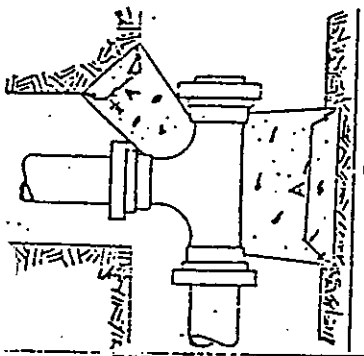

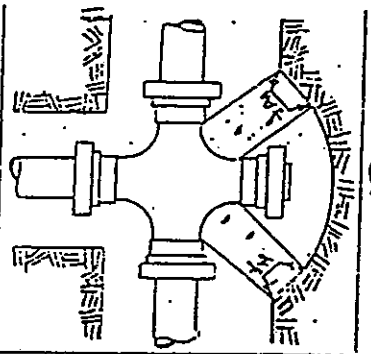

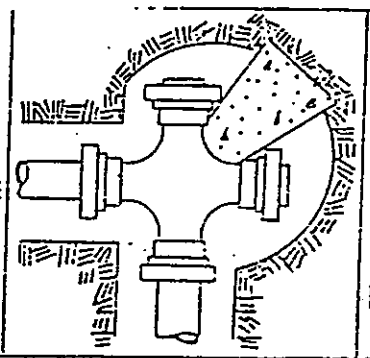

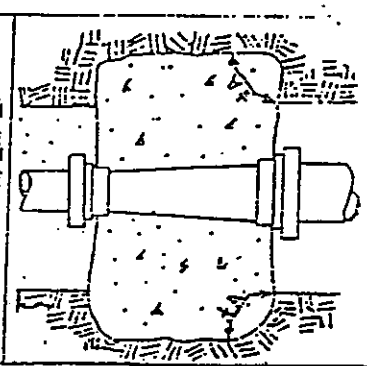

TEE AND PLUG		CROSS W/PLUG		CROSS W/PLUG		REDUCER	
4"	2 s.f.	4"	2 s.f.	4"	2 s.f.	4"-6"	10 s.f.
6"	3	6"	4	6"	4	6"-8"	"
8"	5	8"	7	8"	7	8"-10"	"
10"	8	10"	12	10"	12	10"-12"	"
12"	12	12"	16	12"	16		

NOTES:
1. Thrust blocks to be constructed of class "B" concrete.
2. Areas given are for class 150 pipe at test pressures of 150 p.s.i. in soil with 2,000 p.s.i. bearing capacity. Installations using different pipe, test pressures, and/or soil types should adjust areas accordingly, subject to approval of engineer.
3. Blocks to be poured against undisturbed soil, of minimum area (sq. ft.) specified in table designated "A".
4. Joints and face of plugs to be kept clear of concrete.

DEPARTMENT OF PUBLIC WORKS	CITY OF ANGELS THRUST BLOCK SCHEDULE	REV.	DATE	BY	WS-9

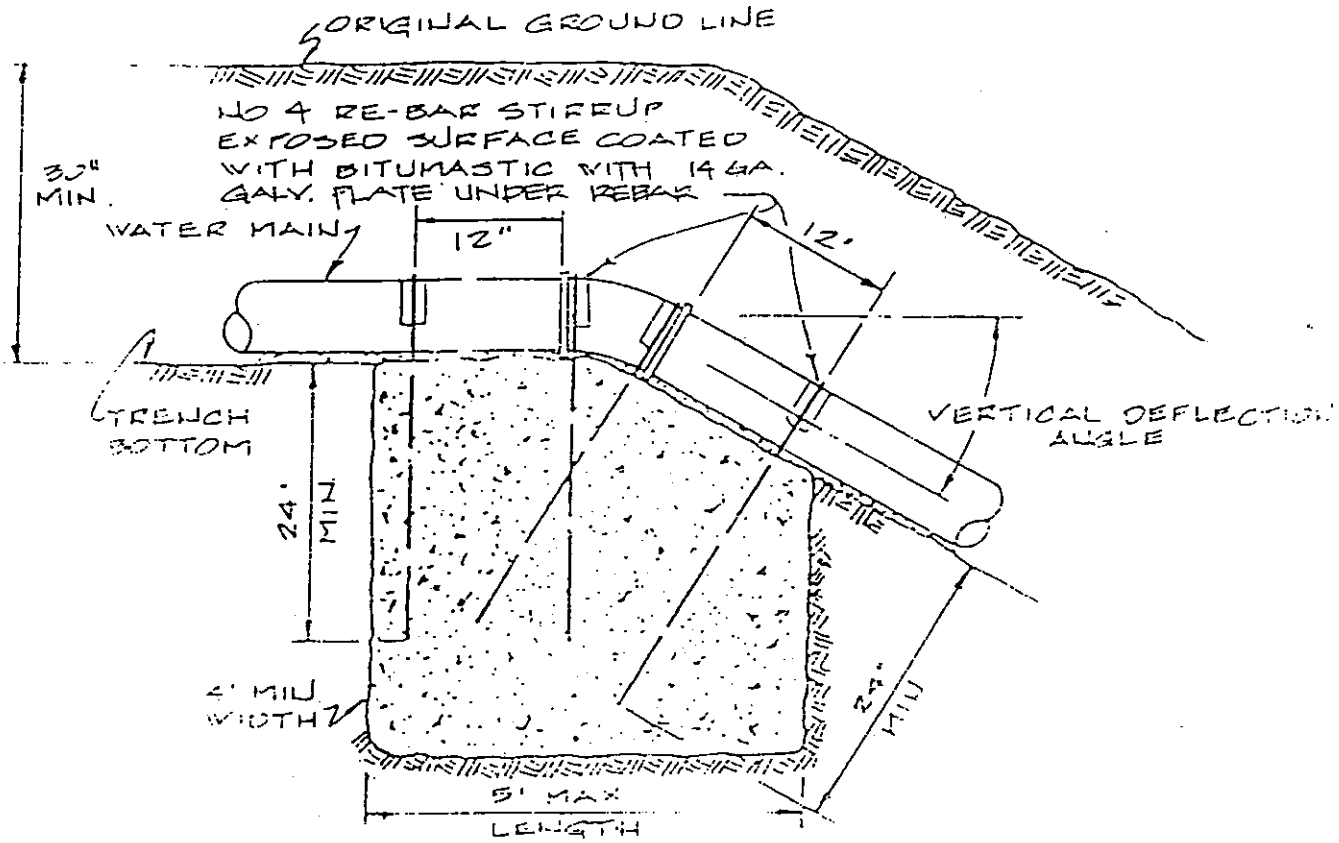

ANCHOR BLOCK VOLUME (CUBIC YARDS)			
PIPE SIZE	VERTICAL DEFLECTION ANGLE		
	11 1/4°	22 1/2°	45°
6"	0.5	0.5	1.0
8"	0.5	1.0	1.0
10"	1.0	1.5	3.0
12"	[illegible]	[illegible]	[illegible]
14"	[illegible]	[illegible]	[illegible]

DEPARTMENT OF PUBLIC WORKS	CITY OF ANGELS ANCHOR BLOCK	REV.	DATE	BY	WS-10

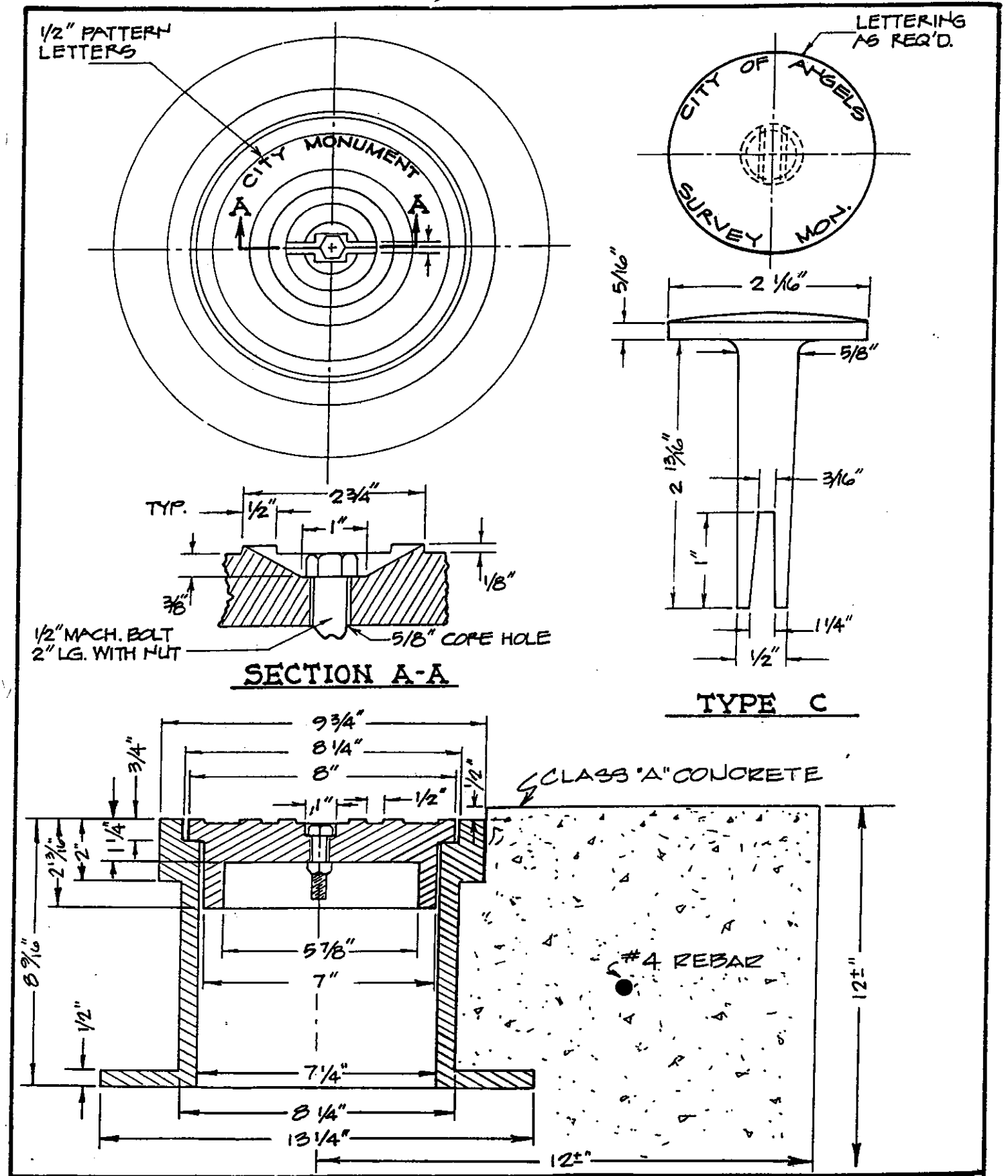

DEPARTMENT OF PUBLIC WORKS	CITY OF ANGELS STANDARD MONUMENT N.T.S.				MD-1
			2/24/81	R.T.V.	
		REV.	DATE	BY	